A 1

CHASSIS

FIG. 200 NISSAN MOTOR CO., LTD.

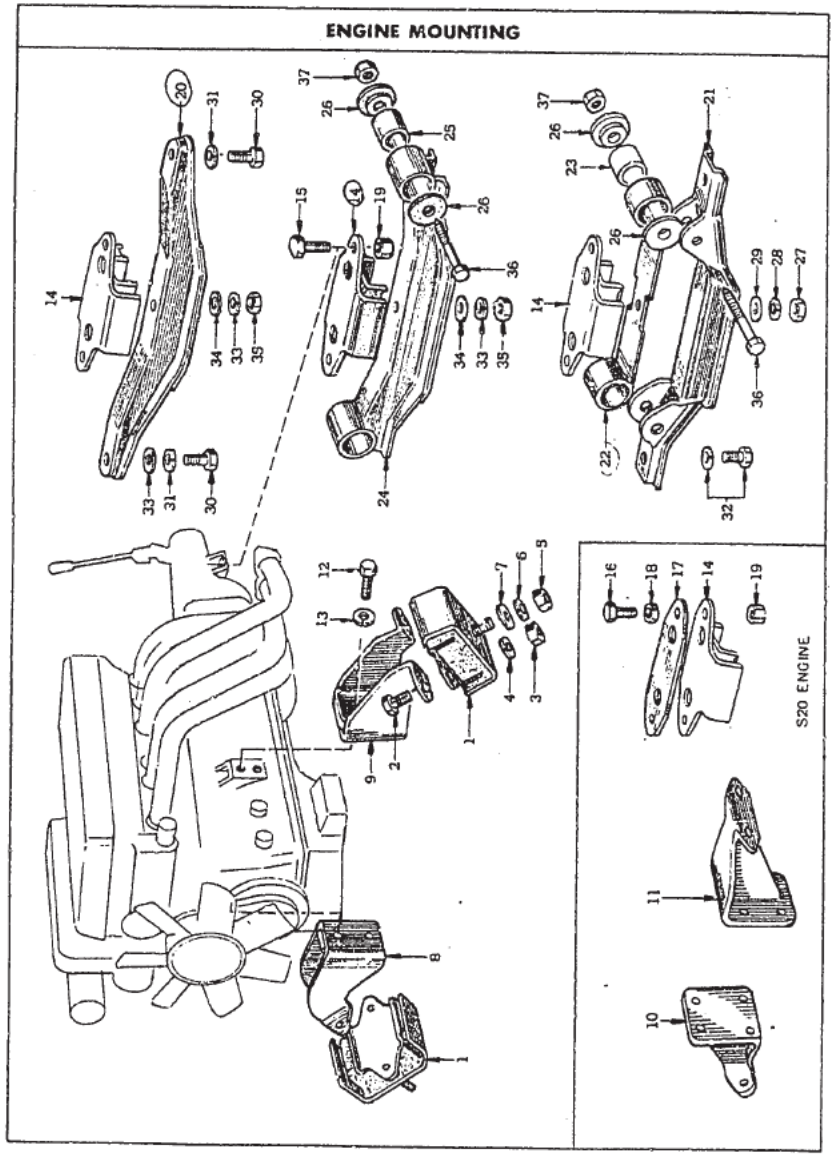

KEY No.	PART NO	PART NAME	QTY	MODELS
		ENGINE MOUNTING		
1	11220–E4100....	INSULATOR ASS'Y-engine mounting front	2	ALL
2	08120–82010....	BOLT	4	ALL
3	08911–20810....	NUT } fixing bracket to insulator	4	ALL
4	08915–13810....	WASHER-lock	4	ALL
5	08911–24010....	NUT	2	ALL
6	08915–14010....	WASHER-lock	2	ALL
7	08915–54010....	WASHER-plain	2	ALL
8	11230–E4100....	BRACKET ASS'Y-engine mounting front (R.H.)	1	L20, L24
9	11231–E4100....	BRACKET ASS'Y-engine mounting front (L.H.)	1	L20, L24
10	11230–E4200....	BRACKET ASS'Y-engine mounting front (R.H.)	1	S20
11	11231–E4200....	BRACKET ASS'Y-engine mounting front (L.H.)	1	S20
12	08121–02010....	BOLT	4 8	L20, L24 S20
13	08915–14010....	WASHER-lock	4 8	L20, L24 S20
(12)	08121–02262....	BOLT-with washer	4	L20, L24
14	11320–E4100....	INSULATOR ASS'Y-engine mounting rear	1	ALL
	11320–N3000....	INSULATOR ASS'Y-engine mounting rear	1	ALL
15	11322–E4100....	BOLT	2	L20
(15)	11322–E4101....	BOLT (from C/# S30-04125)	2	L20, L24

1973. 7

C 1

FIG. 200 NISSAN MOTOR CO. LTD

KEY No.	PART NO	PART NAME	QTY	MODELS
(15)	11322–N3300....	BOLT (from '72-11)	2	L20, L24 △
16	11322–E4200....	BOLT	2	S20 ○
(16)	11322–E4201....	BOLT (from C/# PS30-00350)	2	S20 ×
(16)	11322–N3010....	BOLT (from '72-11)	2	S20
17	11335–E4700....	SPACER	1	S20
18	11336–E4200....	PIECE-distance	2	S20
19	08912–84010....	NUT-self locking	2	ALL
20	11330–E4100....	MEMBER ASS'Y-engine mounting rear	1	L20, S20
21	11330–E8700....	MEMBER ASS'Y-engine mounting rear (from C/# S30-007501, PS30-000501)	1	ALL △
22	11340–E8700....	**SPRING ASS'Y-engine mounting rear (from C/# S30-007501, PS30-000501)**	1	ALL
23	11345–E8700....	BUSH ASS'Y-mounting spring (from C/# S30-007501, PS30-000501)	2	ALL ×
24	11310–N3000....	**MEMBER COMP.-engine mounting rear (from '73 model)**	1	ALL
25	11345–N3000....	BUSH ASS'Y	2	ALL
26	11346–E8700....	STOPPER-mounting (from C/# S30-007501, PS30-000501)	4	ALL
27	08911–24010....	NUT	1	L20, S20
28	08915–24010....	WASHER-lock	1	L20, S20
29	08915–54010....	WASHER-plain	1	L20, S20
30	08124–03010....	BOLT	2	L20, S20
31	08915–24010....	WASHER-lock	2	L20, S20
32	08124–02562....	BOLT-with lock washer	2	L20, S20

生産不能な点、メンバーを11330-E8700を11330-E4100に替えて使用してもらう。

S30

NISSAN MOTOR CO. LTD FIG. 200

KEY No.	PART NO	PART NAME	QTY	MODELS
33	08915–24010....	WASHER-lock	1	ALL
34	08915–54010....	WASHER-plain	1	ALL
35	08911–24010....	NUT	1	ALL
	08124–27510....	BOLT	2	ALL ○
36	11322–N3000....	BOLT	2	ALL
37	08912–84210....	NUT	2	ALL

1974, 3

D 1

FIG. 201-A NISSAN MOTOR CO., LTD.

FUEL TANK

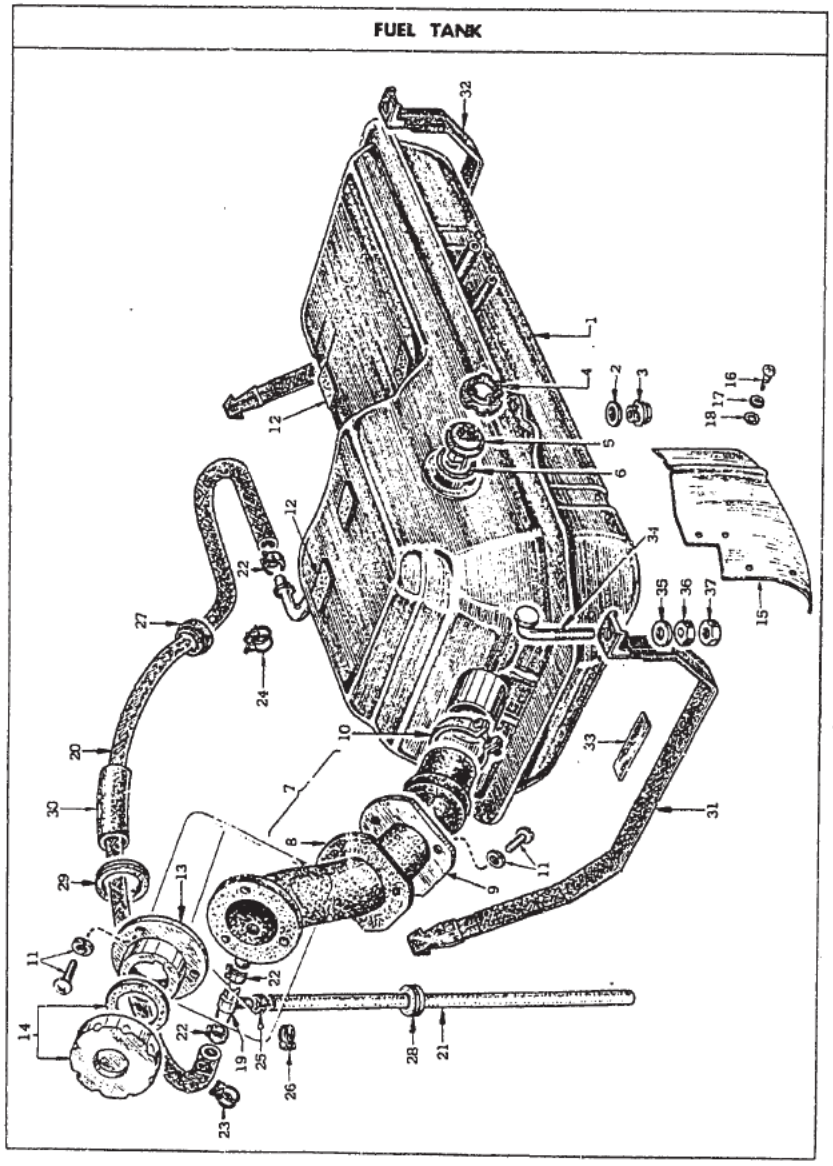

NISSAN MOTOR CO LTD FIG. 201-A

KEY No.	PART NO	PART NAME	QTY	MODELS
		FUEL TANK (exc. PZR) (up to ~~'72-3~~ 73.03)		
1	17201–E4100....	TANK ASS'Y-fuel (60 ℓ)	1	L20, L24
	17201–E4200....	TANK ASS'Y-fuel (60 ℓ)	1	PZ
2	17312–20500....	GASKET-drain plug	1	ALL
3	00931–44810....	PLUG-drain	1	ALL
4	17343–14800....	PLATE-lock	1	ALL
5	25060–E4100....	GAUGE ASS'Y-fuel tank unit	1	ALL
6	17342–18000....	"O" RING-fuel gauge	1	ALL
7	17208–E4100....	HOSE ASS'Y-fuel filler	1	L20, PZ ┐○┘
	17208–E8750....	*HOSE ASS'Y-fuel filler	1	ALL
8	★17312–E4100....	• PACKING-filler hose	1	L20, PZ ┐×┘
	17312–E8700....	GROMMET-filler hose (from '72 model)	1	ALL
9	★17311–E8700....	• PLATE-hose grommet	1	ALL
10	17213–E4100....	CLAMP-hose	1	L20, PZ ┐△┘
	17213–E4101....	CLAMP-hose	1	ALL ┐○┘
	17213–E4102....	CLAMP-hose	1	ALL
11	08310–51214....	SCREW-with washer	6	ALL
12	17231–E4100....	FELT-fuel tank mounting	4	ALL

1974, 3

FIG. 201-A NISSAN MOTOR CO., LTD

KEY No.	PART NO.	PART NAME	QTY	MODELS
13	17212–E4101....	NECK-filler, fuel tank	1	L20, PZ △
	17212–E8800....	NECK-filler, fuel tank	1	ALL △
14	17251–E4101....	CAP ASS'Y-fuel tank filler	1	L20, PZ △
	17251–E4102....	CAP ASS'Y-fuel tank filler	1	L20, PZ △
	17251–E8800....	CAP ASS'Y-fuel tank filler	1	ALL △
	17251–E8801....	CAP ASS'Y-fuel tank filler	1	ALL △
15	17270–E4100....	PROTECTOR-filler hose	1	ALL
16	08510–41012....	SCREW-tapping	4	ALL
17	08915–13410....	WASHER-lock	4	ALL
18	08915–43410....	WASHER-plain	4	ALL
19	17227–E4100....	JOINT-breather tube	1	L20, PZ △
	17227–E4101....	JOINT-breather tube (from C/# S30-06054)	1	ALL △
20	17235–E4100....	HOSE-ventilation, tank to filler hose	1	ALL
21	17243–E4100....	HOSE-ventilation	1	ALL
22	17548–E4100....	CLAMP-hose	3	L20, PZ △
23	08723–12400....	CLAMP-hose	2	ALL △
24	08723–12600....	CLAMP-hose	1	ALL △
25	17546–E4100....	CLAMP-hose	1	L20, PZ △
26	08723–11600....	CLAMP-hose	1	ALL △
27	17241–E4100....	GROMMET-rubber	1	ALL

NISSAN MOTOR CO., LTD. FIG. 201-A

KEY No.	PART NO.	PART NAME	QTY	MODELS
28	17225–E4600....	GROMMET-rubber	1	L20, PZ △
	00951–11200....	GROMMET-rubber	1	ALL △
29	17271–E4100....	GROMMET-rubber	1	ALL
30	17244–E4100....	COVER-breather hose	1	ALL
31	17405–E4100....	BAND ASS'Y-fuel tank mounting (R.H.)	1	ALL
32	17410–E4100....	BAND ASS'Y-fuel tank mounting (L.H.)	1	ALL
33	17413–E4100....	SHIM-fuel tank mounting (R.H.)	1	ALL
	17417–E4100....	SHIM-fuel tank mounting (L.H.)	1	ALL
34	17415–E4100....	BOLT	2	ALL
35	08915–54010....	WASHER-plain	2	ALL
36	08911–24010....	NUT	2	ALL
	08915–14010....	WASHER-lock	2	ALL
37	01221–00053....	NUT-flange	2	ALL

1974, 3

FIG. 201-B NISSAN MOTOR CO., LTD.

FUEL TANK (FOR EVAPO)

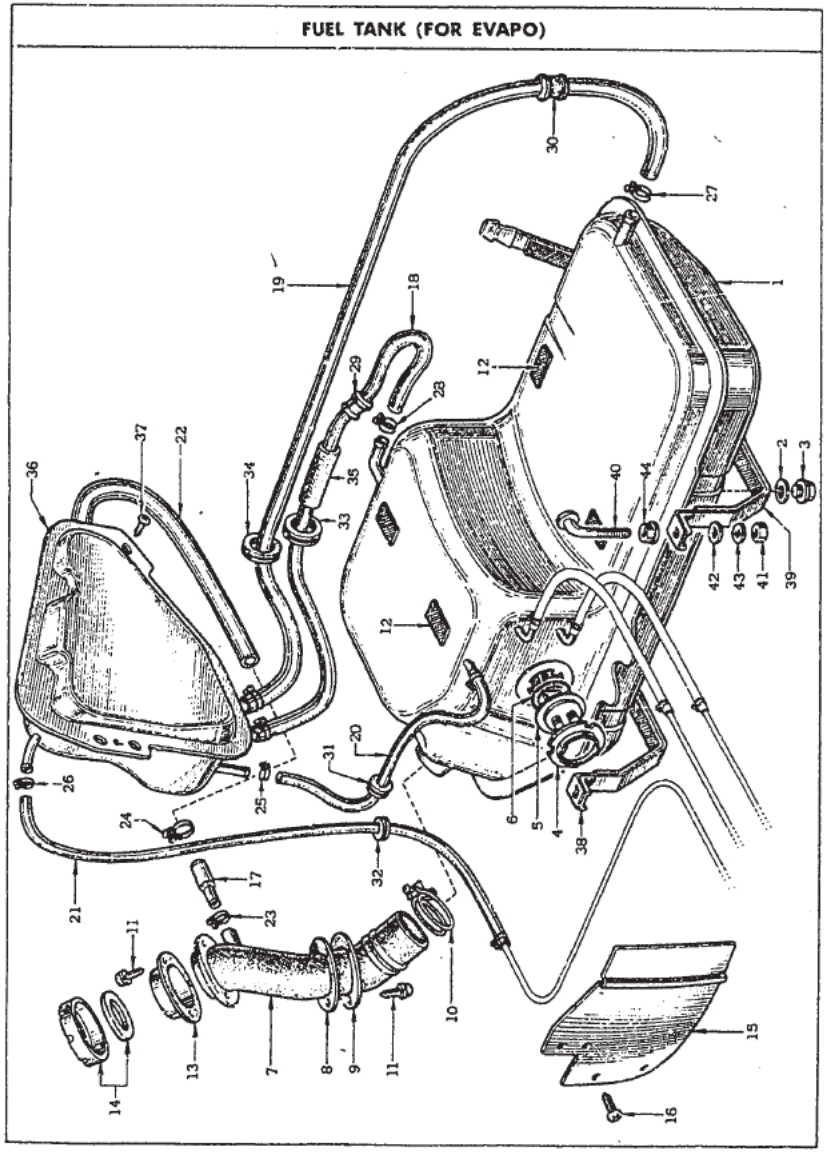

NISSAN MOTOR CO. LTD. FIG. 201-B

KEY No.	PART NO	PART NAME	QTY	MODEL
		FUEL TANK (for EVAPO from '73-4)		
1	17201–E4600....	**TANK ASS'Y-fuel (60 ℓ)**	1	L20, L24
2	17312–20500....	GASKET-drain plug	1	L20, L24
3	00931–44810....	PLUG-drain	1	L20, L24
4	17343–14801....	• PLATE-lock	1	L20, L24
5	25060–E4100....	GAUGE ASS'Y-fuel tank unit	1	L20, L24
6	17342–18000....	"O" RING-fuel gauge	1	L20, L24
7	17208–N3000....	• **HOSE-fuel filler**	1	L20, L24
8	17312–E8700....	• GROMMET-filler hose	1	L20, L24
9	★17311–E8700....	• PLATE-hose grommet	1	L20, L24
10	17213–E4102....	CLAMP-hose	1	L20, L24
11	01431–00043....	SCREW-with washer	6	L20, L24
12	17231–E4100....	FELT-fuel tank mounting	4	L20, L24
13	17212–E8800....	NECK-filler, fuel tank	1	L20, L24
14	17251–E8801....	CAP-fuel tank filler	1	L20, L24
15	17270–E4100....	PROTECTOR	1	L20, L24
16	08510–41223....	SCREW-tapping	4	L20, L24
17	17227–E4601....	JOINT-breather tube (for EVAPO.)	1	L20, L24
18	17235–E4600....	HOSE-breather 17.0×24.0 [illegible]	1	L20, L24

1974, 3

FIG. 201-B NISSAN MOTOR CO., LTD.

KEY No.	PART NO.	PART NAME	QTY	MODELS
19	17236–E4600....	TUBE-flexible	1	L20, L24
20	17239–E4600....	HOSE	1	L20, L24
21	17240–E4601....	TUBE-flexible	1	L20, L24
22	17238–E4601....	TUBE-flexible	1	L20, L24
23	08723–12400....	CLAMP-hose	1	L20, L24
24	08723–12600....	CLAMP-hose	3	L20, L24
25	08723–11600....	CLAMP-hose	1	L20, L24
26	08723–11800....	CLAMP-hose	1	L20, L24
27	08723–12000....	CLAMP-hose	2	L20, L24
28	08723–11400....	CLAMP-hose	2	L20, L24
29	17241–E4100....	GROMMET-venturi hose	1	L20, L24
30	17242–E4600....	GROMMET-venturi hose	1	L20, L24
31	17225–E4600....	GROMMET-rubber	1	L20, L24
32	00951–11200....	GROMMET-rubber	1	L20, L24
33	17271–E4100....	GROMMET-rubber	1	L20, L24
34	17271–E4600....	GROMMET-rubber	1	L20, L24
35	17244–E4100....	COVER-breather hose	1	L20, L24
36	17350–E4601....	TANK ASS'Y-reservoir	1	L20, L24
37	01431–00043....	SCREW	3	L20, L24
38	17405–E4100....	BAND ASS'Y-fuel tank mounting (R.H.)	1	L20, L24

NISSAN MOTOR CO., LTD. FIG. 201-B

KEY No.	PART NO.	PART NAME	QTY	MODELS
39	17410–E4100....	BAND ASS'Y-fuel tank mounting (L.H.)	1	L20, L24
40	17415–E4100....	BOLT-fuel tank mounting front	2	L20, L24
41	08911–24010....	NUT	2	L20, L24
42	08915–54010....	WASHER-plain	2	L20, L24
43	08915–14010....	WASHER-lock	2	L20, L24
44	01221–00050....	NUT-flange	2	L20, L24

1974. 3

FIG. 202 NISSAN MOTOR CO., LTD.

FUEL TANK

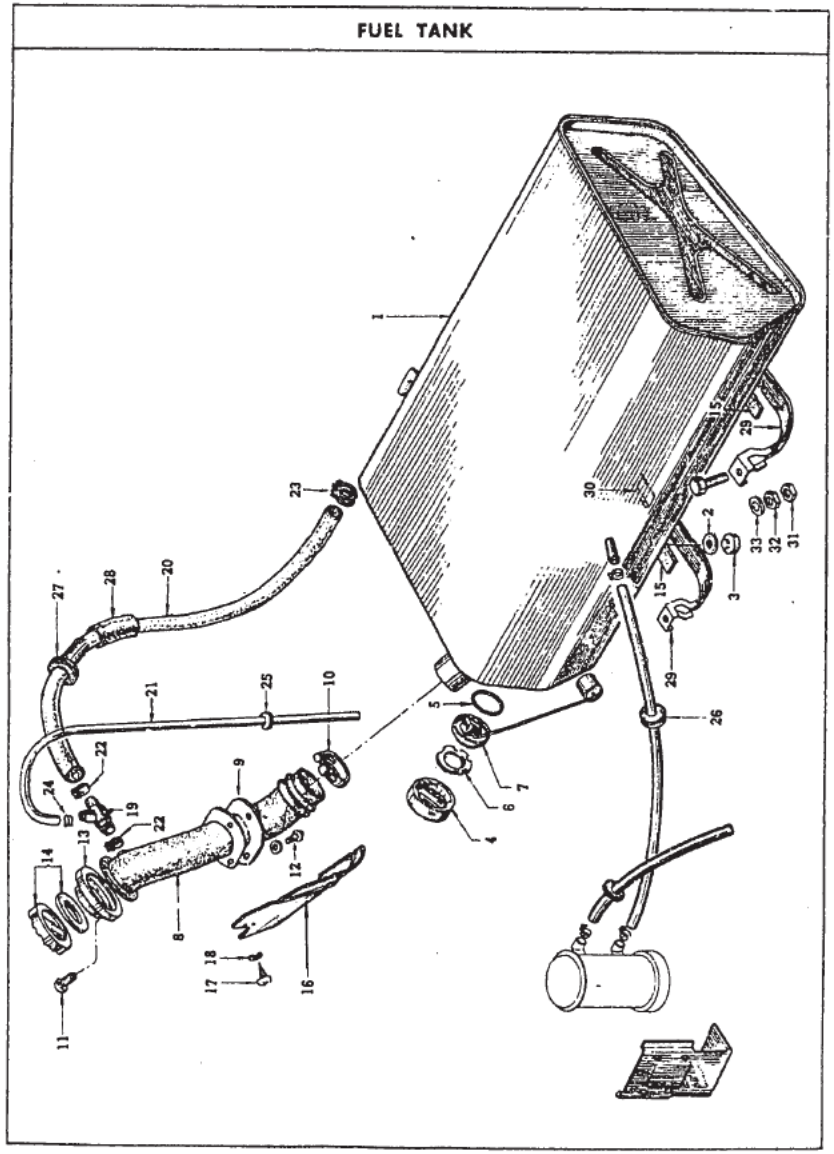

KEY No.	PART NO.	PART NAME	QTY	MODELS
		FUEL TANK (PZR) (up to '72)		
1	17201–E7200....	**TANK ASS'Y-fuel (100 ℓ)**	1	PZR
2	17312–20500....	GASKET-drain plug	1	PZR
3	00931–44810....	PLUG-drain	1	PZR
4	17346–E7200....	COVER-fuel tank gauge	1	PZR
5	17342–18000....	"O" RING-fuel gauge	1	PZR
6	17343–14800....	PLATE-lock	1	PZR
7	25060–E7200....	GAUGE ASS'Y-fuel tank unit	1	PZR
8	17208–E4100....	**HOSE ASS'Y-fuel filler**	1	PZR ┐ ○ ┘
	17208–E8750....	* **HOSE ASS'Y-fuel filler**	1	PZR
		2.0 17208-N3050		
9	★17312–E4100....	* PACKING-filler hose	1	PZR ┐ × ┘
	17312–E8700....	GROMMET-filler hose (from '72 model)	1	PZR
10	17213–E4101....	CLAMP-hose	1	PZR ┐ × ┘
	17213–E4102....	CLAMP-hose	1	PZR
11	08310–51214....	SCREW-with washer	6	PZR
12	08513–40812....	SCREW-tapping	3	PZR
13	17212–E4102....	NECK-filler	1	PZR ┐ △ ┘
	17212–E8800....	NECK-filler	1	PZR

1974. 3

FIG. 202 NISSAN MOTOR CO., LTD.

KEY No.	PART NO	PART NAME	QTY	MODELS
14	17251–E4102....	CAP ASS'Y-fuel filler	1	PZR △
	17251–E8800....	CAP ASS'Y-fuel filler	1	PZR △
	17251–E8801....	CAP ASS'Y-fuel filler	1	PZR ○
15	17230–E7200....	FELT-fuel tank mounting	2	PZR
16	17270–E4100....	PROTECTOR-filler hose	1	PZR
17	08510–41012....	SCREW-tapping	4	PZR
18	08915–13510....	WASHER-lock	4	PZR
19	17227–E4600....	JOINT-breather tube	1	PZR ×
	17227–E4101....	JOINT-breather tube (from '71-4)	1	PZR ×
20	17235–E7200....	HOSE-breather	1	PZR
21	17243–E4100....	HOSE-ventilation	1	PZR
22	08723–12410....	CLAMP-hose	2	PZR
23	08723–12600....	CLAMP-hose	1	PZR
24	08723–11610....	CLAMP-hose	1	PZR
25	17241–E4100....	GROMMET-ventilation hose	1	PZR
26	17225–E4600....	GROMMET-rubber	1	PZR
27	17271–E4100....	GROMMET-rubber	1	PZR
28	17244–E4100....	COVER-breather hose	1	PZR
29	17405–E7200....	BAND ASS'Y-fuel tank mounting	2	PZR
30	★17413–E7200....	•SHIM	2	PZR

KEY No.	PART NO	PART NAME	QTY	MODELS
31	08911–24210....	NUT	2	PZR
32	08911–34210....	NUT	2	PZR
33	08915–54210....	WASHER-plain	2	PZR

FIG. 203-A NISSAN MOTOR CO., LTD.

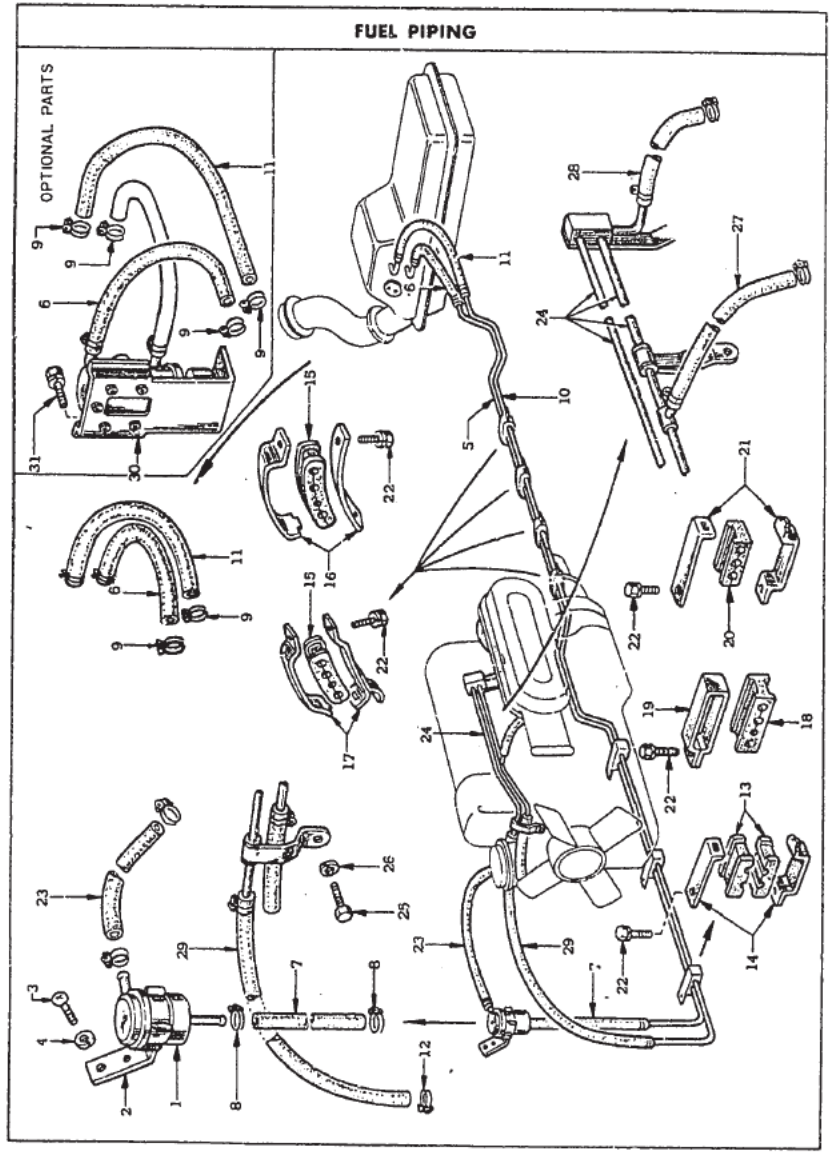

KEY No	PART NO	PART NAME	QTY	MODELS
		FUEL STRAINER & FUEL PIPING (L20, L24) (up to '73-3)		
1	16400–68201....	STRAINER ASS'Y-fuel	1	ZS, ZL
	16400–E5200....	STRAINER ASS'Y-fuel	1	L20, L24
2	16419–E4100....	BRACKET-fuel strainer	1	L20, L24
3	08310–41212....	SCREW	2	L20, L24
4	08915–13412....	WASHER-lock	2	L20, L24
5	17501–E4101....	TUBE ASS'Y-fuel tank to strainer	1	L20, L24
	17501–N3000....	TUBE ASS'Y-fuel tank to strainer (from '72-8)	1	L20, L24
6	17505–E4100....	TUBE-flexible	1	L20
	☆ 08740–33030....	HOSE-flexible	1	L20, L24
	08740–30030....	HOSE-flexible (for car cooler)	1	(op.) ZL
7	17506–E4100....	TUBE-flexible	1	L20
	☆ 08740–22030....	HOSE-flexible	1	L20, L24
8	16439–A0604....	CLAMP-hose	2	L20
9	08723–11600....	CLAMP-hose	4	L20, L24
10	17510–E4101....	TUBE-fuel return	1	L20, L24
	17510–N3000....	TUBE-fuel return (from '72-8)	1	L20, L24
11	17508–E4100....	TUBE-flexible	1	L20
	※ 08740–36010....	HOSE-fuel	1	L20, L24

注. ☆、※印部品は203-4ページを参照下さい。

1974. 3

FIG. **203-A** NISSAN MOTOR CO., LTD.

KEY No.	PART NO	PART NAME	QTY	MODELS
12	08723–11100....	CLAMP-hose	2	L20 ┐ ○ ┘
	08723–11300....	CLAMP-hose	2	L20, L24
13	46363–E4100....	RUBBER-tube clamp	4	L20, L24
14	46353–E4100....	CLAMP-tube	4	L20, L24
15	46376–E4100....	RUBBER-tube clamp	5	L20, L24
16	46357–E4100....	CLAMP-tube	4	L20, L24
17	46396–E4100....	CLAMP ASS'Y-tube upper	1	L20, L24
18	46379–E4100....	RUBBER-tube clamp	1	L20, L24
19	46358–E4100....	CLAMP-tube	1	L20, L24
20	46369–E4100....	RUBBER-tube clamp	1	L20, L24
21	46355–E4100....	CLAMP-tube	1	L20, L24
22	08360–41214....	SCREW-with washer	11	L20, L24
23	16440–E4102....	TUBE ASS'Y-flexible, fuel strainer to fuel pump	1	ZS, ZL ┐ △ ┘
	16440–E4104....	TUBE ASS'Y-flexible, fuel strainer to fuel pump	1	L20, L24 ┐ △ ┘
	☆ 08740–25030....	TUBE ASS'Y-flexible, fuel strainer to fuel pump	1	L20, L24
	16440–E4105....	TUBE ASS'Y-flexible, fuel strainer to fuel pump	1	(op.) L20, L24 ┐ △ ┘
	☆ 08740–37030....	TUBE ASS'Y-flexible, fuel strainer to fuel pump	1	(op.) L20, L24
	17106–E3000....	CLAMP-tube	1	(op.) L20, L24
24	17520–E4100....	TUBE ASS'Y-fuel pump to carburetor	1	L20 ┐ △ ┘
	17520–E4103....	TUBE ASS'Y-fuel pump to carburetor	1	L20, L24

注. ☆印部品については203-4ページを参照下さい。

NISSAN MOTOR CO. LTD. FIG. **203-A**

KEY No.	PART NO	PART NAME	QTY	MODELS
(23)	17520–E4102....	TUBE ASS'Y-fuel pump to carburetor	1	(op.) L20, L24
25	08110–82210....	BOLT	2	L20, L24
26	08915–13810....	WASHER-lock	2	L20, L24
27	17522–E4101....	TUBE-flexible, fuel tube to carburetor front	1	L20, L24 ┐ △ ┘
	△ 08740–23526....	TUBE-flexible, fuel tube to carburetor front	1	L20, L24
28	17522–E4102....	TUBE-flexible, fuel tube to carburetor rear (200mm)	2	L20, L24 ┐ △ ┘
	△ 08740–20020....	TUBE-flexible, fuel tube to carburetor rear (200mm)	2	L20, L24
29	17527–A7102....	TUBE ASS'Y-fuel return	1	L20 ┐ △ ┘
	17527–A7103....	TUBE ASS'Y-fuel return	1	L20, L24 ┐ △ ┘
	※ 08740–48010....	TUBE ASS'Y-fuel return	1	L20, L24
30	17033–E4200....	BRACKET ASS'Y-fuel pump	1	(op.) ZL
31	08363–61214....	BOLT-with lock washer	3	(op.) ZL

注 ☆印部品は長物部品08742－20030を切断してご使用下さい。
△印部品は長物部品08742－20020を切断してご使用下さい。
※印部品は長物部品08742－20010を切断してご使用下さい。

1974. 3

FIG. 203-B NISSAN MOTOR CO., LTD.

FUEL PIPING (FOR EVAPO)

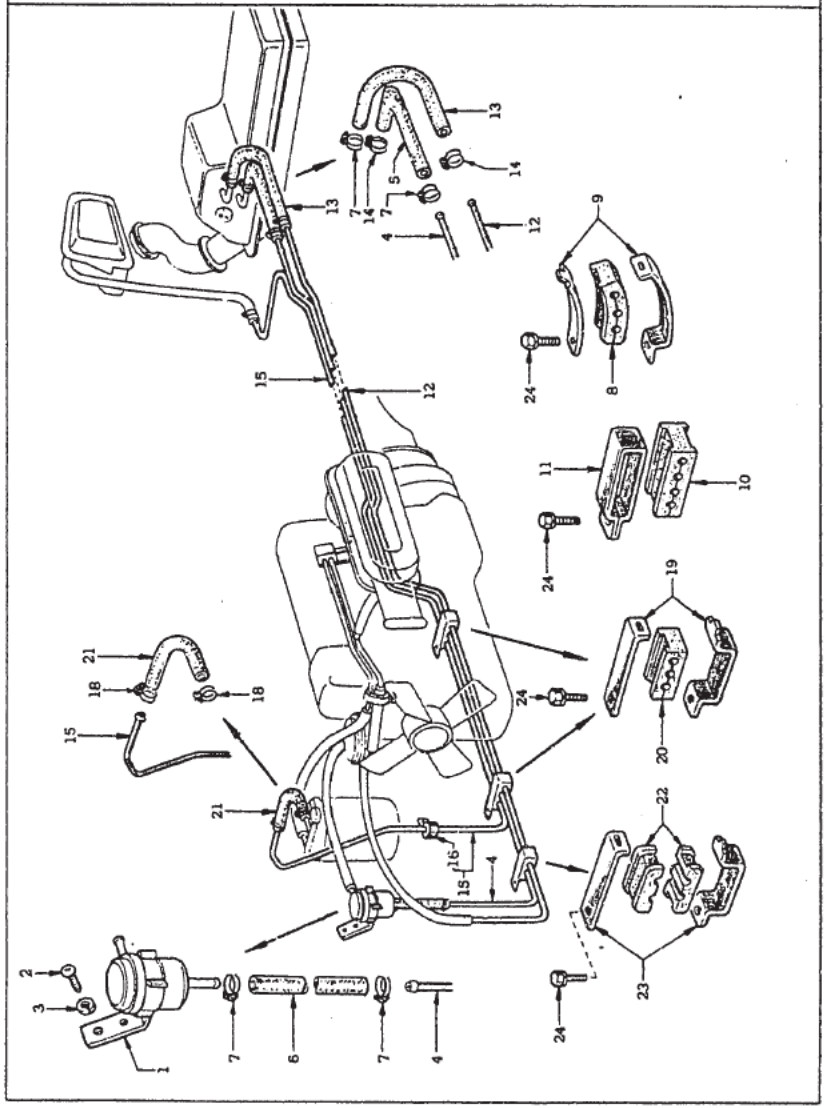

KEY No.	PART NO	PART NAME	QTY	MODELS

FUEL STRAINER & FUEL PIPING (L20, L24)
(for EVAPO. from '73-4)

1	16419—N3001....	BRACKET ASS'Y-fuel strainer	1	L20, L24
2	08310—41212....	SCREW	2	L20, L24
3	08915—13412....	WASHER-lock	2	L20, L24
4	17501—N3001....	TUBE-fuel tank to strainer	1	L20, L24
5	☆08740—33030....	HOSE-fuel (L=330mm)	1	L20, L24
6	☆08740—20030....	HOSE-fuel (L=200mm)	1	L20, L24
7	08723—11600....	CLAMP-hose	6	L20, L24
8	46375—E4600....	RUBBER-tube clamp	5	L20, L24
9	46357—E4100....	CLAMP-tube upper	4	L20, L24
10	46378—E4600....	RUBBER-tube clamp	1	L20, L24
11	46358—E4100....	CLAMP-tube	1	L20, L24
12	17510—N3001....	TUBE-fuel return	1	L20, L24
13	※08740—36010....	HOSE-fuel (L=360mm)	1	L20, L24
14	08723—11300....	HOSE-clamp	2	L20, L24
15	17361—N3001....	TUBE-air supplier	1	L20, L24
16	★46351—E4600....	CLAMP ASS'Y-tube	4	L20, L24
17	△08740—15020....	HOSE-fuel (L=150mm)	1	L20, L24
18	08723—11400....	CLAMP-hose	2	L20, L24

注 ☆印部品は長物部品08742－20030を切断してご使用下さい。※印部品は長物部品08742－20010を切断してご使用下さい。
△印部品は長物部品08742－20020を切断してご使用下さい。

1974, 3

FIG. 203-B NISSAN MOTOR CO. LTD.

KEY No.	PART NO	PART NAME	QTY	MODELS
19	46354–E4600....	CLAMP-tube upper	3	L20, L24
20	17522–N3001....	RUBBER-tube clamp	3	L20, L24
21	17521–N3001....	HOSE-canister	1	L20, L24
22	46368–E4600....	RUBBER-tube clamp	1	L20, L24
23	46355–E4100....	CLAMP-tube upper	1	L20, L24
24	08360–41214....	SCREW-with lock washer	14	L20, L24
25	08360–61214....	SCREW-with lock washer	1	L20, L24
	24220–B0701....	CLIP-cable	1	L20, L24

NOTE

●エレファント　スーパーPCV

PCV装置によって発生しやすくなったサビや汚れを完全に抑制する高度の特性を備えた新時代のオイルです。

エレファント
モーターオイル
日産純正

FIG. 204 NISSAN MOTOR CO., LTD.

FUEL STRAINER & FUEL PIPING

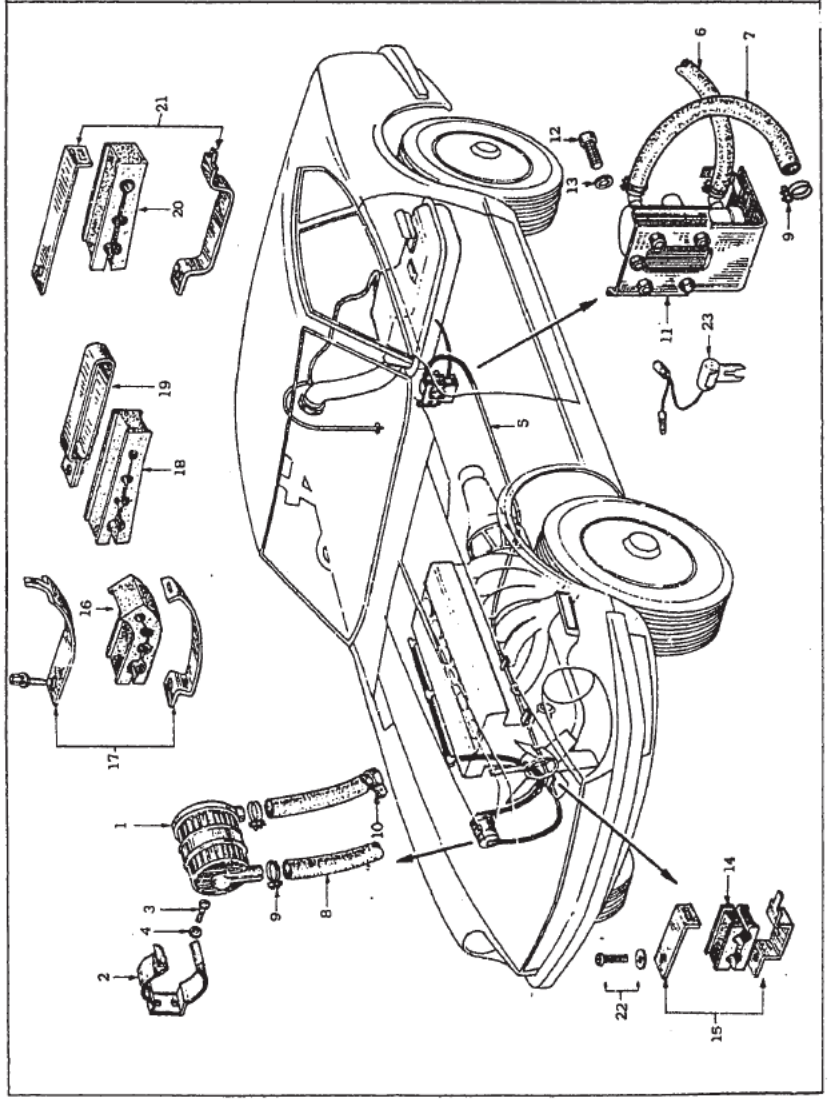

KEY No.	PART NO.	PART NAME	QTY	MODELS

FUEL STRAINER & FUEL PIPING (S20)
(up to '72 model)

1	16400—25900....	STRAINER ASS'Y-fuel	1	S20
2	16421—2[illegible]900....	CLIP-fuel strainer	1	S20
3	08310—41212....	SCREW	2	S20
4	08915—13412....	WASHER-lock	2	S20
5	17501—E4101....	TUBE ASS'Y-fuel tank to strainer	1	S20
6	17508—E4200....	TUBE-flexible, fuel tank to fuel pump	1	PZ
	08740—22030....	HOSE-flexible, fuel tank to fuel pump	1	PZ
7	17505—E4200....	TUBE-flexible, fuel tube to strainer	1	S20
	08740—30030....	HOSE-flexible, fuel tube to strainer	1	S20
8	17506—E4200....	TUBE-flexible, fuel pump to fuel tube	1	S20
	08740—26030....	HOSE-flexible, fuel pump to fuel tube	1	S20
9	08723—11600....	CLAMP-hose	6	S20
10	17285—E4200....	CLIP-hose	1	S20
11	17033—E4200....	BRACKET ASSLY-fuel pump	1	S20
12	08110—61010....	BOLT	3	S20
13	08915—13610....	WASHER-lock	3	S20
14	46365—E4200....	RUBBER-tube clamp	4	S20
15	46353—E4100....	CLAMP-tube	4	S20

1974, 3

FIG. 204 NISSAN MOTOR CO., LTD.

KEY No.	PART NO.	PART NAME	QTY	MODELS
16	46377–E4200....	RUBBER-tube clamp	5	S20
17	46357–E4100....	CLAMP-tube	5	S20
	46396–E4100....	CLAMP ASS'Y-tube	1	S20
18	46380–E4200....	RUBBER-tube clamp	1	S20
19	46358–E4100....	CLAMP-tube	1	S20
20	46370–E4200....	RUBBER-tube clamp	1	S20
21	46355–E4100....	CLAMP-tube	1	S20
22	08360–41214....	SCREW	11	S20
23	27984–E4100....	CONDENSER-noize	1	S20

NOTE

●エレファント　スーパーデラックス

冬期又は寒冷地にてノロノロ運転で発生しがちな錆や腐食からエンジンを守ります。

エレファント
モーターオイル

日産純正

FIG. 205 NISSAN MOTOR CO., LTD.

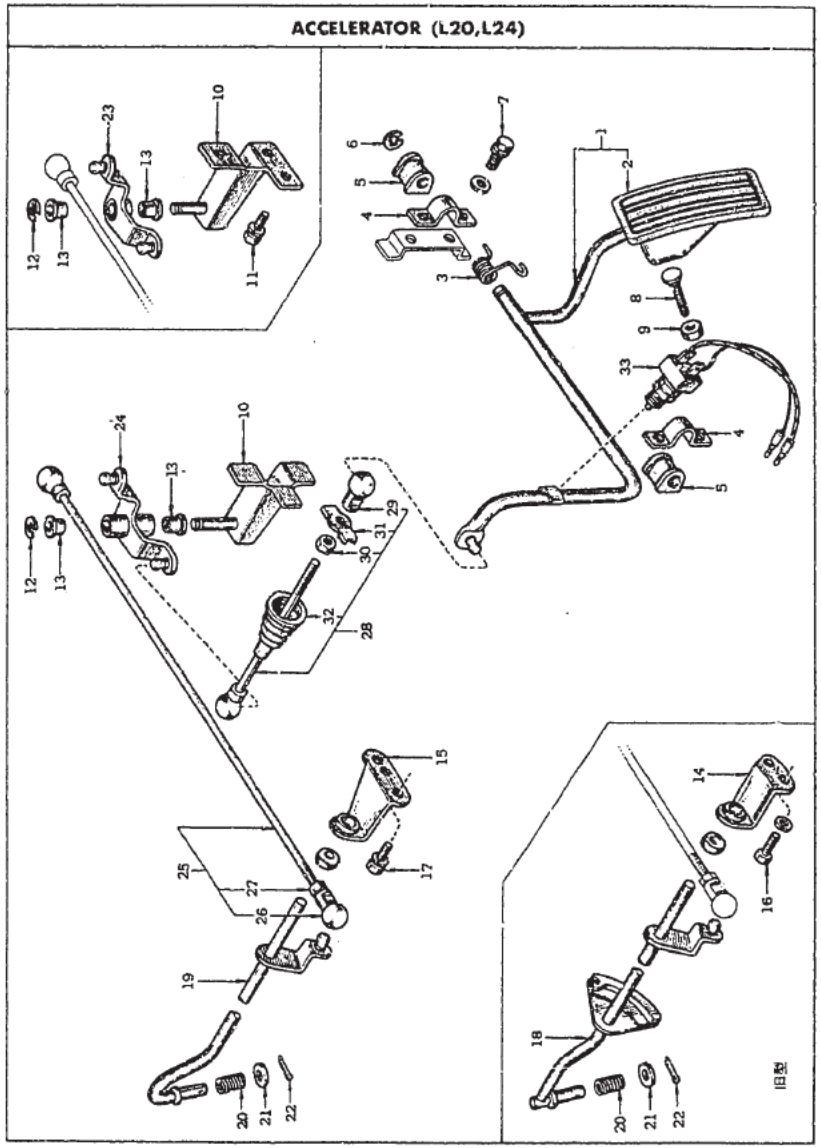

NISSAN MOTOR CO. LTD. FIG. 205

KEY No	PART NO	PART NAME	QTY	MODELS
		ACCELERATOR (L20, L24)		
1	18010–E4100....	**PEDAL ASS'Y-accelerator**	1	ZS, ZL
	18010–E4101....	**PEDAL ASS'Y-accelerator (from '70-5)**	1	ZS, ZL
	18010–E8700....	**PEDAL ASS'Y-accelerator (from C/#S30-007501)**	1	M-all
	18010–N3000....	**PEDAL ASS'Y-accelerator (from '73 model)**	1	M-all
	18010–E4500....	**PEDAL ASS'Y-accelerator**	1	ZA, ZSA
	18010–E8720....	**PEDAL ASS'Y-accelerator (from C/#S30-007501)**	1	A-all
	18010–N3020....	**PEDAL ASS'Y-accelerator (from '73 model)**	1	A-all
2	18014–E4100....	PAD-accelerator pedal	1	L20, L24
	18014–N3000....	PAD-accelerator pedal	1	L20, L24
3	18215–E4100....	SPRING-return, accelerator	1	L20, L24
4	18020–E4100....	BRACKET-accelerator pedal	2	L20, L24
5	18021–E4100....	BUSH-accelerator pedal	2	L20, L24
6	18019–E4100....	RING-slip, accelerator shaft	1	L20, L24
7	08363–61214....	BOLT-with lock washer	4	L20, L24
8	18017–E4100....	BOLT-special (from C/#S30-007501)	1	L20
9	08911–10610....	NUT	1	L20
(8)	18017–E8701....	BOLT-special (from '72 model)	1	L20, L24
(9)	08911–10810....	NUT	1	L20, L24

1974, 3

FIG. 205 NISSAN MOTOR CO. LTD.

KEY No.	PART NO	PART NAME	QTY	MODELS
10	18123–E4100....	BRACKET ASS'Y-bell crank	1	L20, L24 ×注1
★	18123–N3000....	BRACKET ASS'Y-bell crank (from '73 model)	1	L20, L24 ×注1
11	08360–61414....	SCREW (up to '72 model)	3	L20, L24
12	18137–10600....	RING-snap	1	L20, L24
13	18124–73000....	BUSH-nylon	2	L20, L24
14	18310–E4100....	SUPPORT ASS'Y-accelerator shaft	1	L20, L24 ×
15	18310–N3000....	SUPPORT ASS'Y-accelerator shaft (from '73 model)	1	L20, L24 ×
16	08360–61412....	BOLT	2	L20, L24 △
17	08363–61214....	BOLT	2	L20, L24 △
18	18300–E4100....	SHAFT ASS'Y-torsion	1	ZS,ZL,ZA ○
19	18300–E4101....	SHAFT ASS'Y-torsion	1	L20, L24 ×
	18300–N3000....	SHAFT ASS'Y-torsion (from '73 model)	1	L20, L24 ×
20	18212–73400....	SPRING-accelerator shaft	1	L20, L24
21	08915–43810....	WASHER-plain	1	L20, L24
22	00921–02110....	PIN-cotter	1	L20, L24
23	18121–E4100....	BELL CRANK ASS'Y-accelerator	1	ZS, ZL ×
	18121–E4101....	BELL CRANK ASS'Y-accelerator (from '70-5)	1	L20, L24 ×
24	18121–N3000....	BELL CRANK ASS'Y-accelerator (from '73 model)	1	L20, L24 ×

注1. ベルクランク ブラケットは'73年型車よりダッシュ パネルに溶接致しました。

KEY No.	PART NO.	PART NAME	QTY	MODELS
25	18130–E4100....	**BALL JOINT ASS'Y**	1	ZS, ZL ×
	18130–E4101....	**BALL JOINT ASS'Y (from '70-5)**	1	L20, L24 ×
26	18131–E4100....	BALL JOINT	1	L20, L24
27	08911–10410....	NUT	1	L20, L24
28	18200–E4100....	**BALL JOINT ASS'Y**	1	ZS, ZL ×
	18200–E4101....	**BALL JOINT ASS'Y (from '70-5)**	1	ZS, ZL × △
	18200–E4102....	**BALL JOINT ASS'Y**	1	L20, L24 × △
29	18131–E4100....	BALL JOINT	1	L20, L24
30	08911–10410....	NUT	1	L20, L24
31	18135–E4100....	PLATE-accelerator stopper	1	ZS, ZL, ZA
32	18218–E4101....	BOOT-accelerator rod	1	ZS, ZL ○
	18218–E4102....	BOOT-accelerator rod	1	L20, L24 ○
33	25390–20300....	SWITCH ASS'Y-kick down	1	A-all

FIG. 206-A NISSAN MOTOR CO., LTD.

ACCELERATOR LINKAGE (S20)

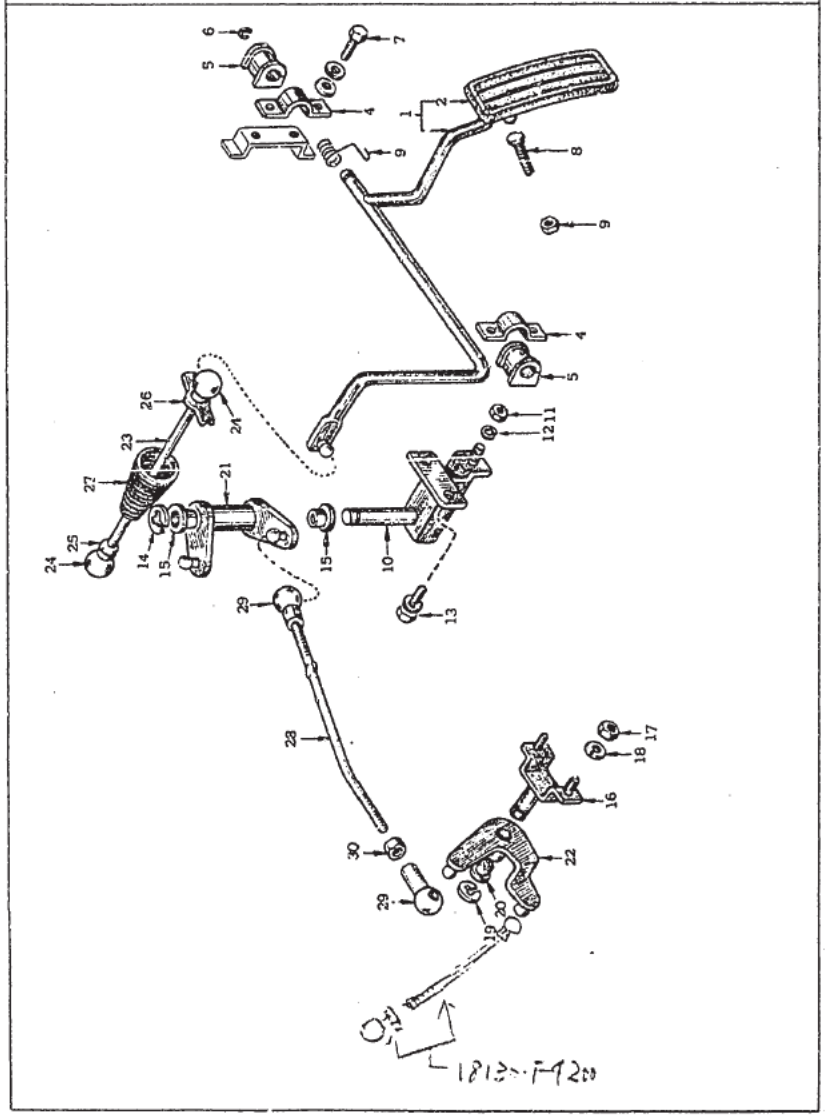

KEY No	PART NO	PART NAME	QTY	MODELS
		ACCELERATOR (S20) **(up to '72 model)**		
1	18010-E4100....	**PEDAL ASS'Y-accelerator**	1	S20
	18010-E4101....	**PEDAL ASS'Y-accelerator (from '70-5)**	1	S20
	18010-E8700....	**PEDAL ASS'Y-accelerator (from C/# PS30-000501)**	1	S20
2	18014-E4100....	PAD-accelerator pedal	1	S20
3	18215-E4100....	SPRING-return	1	S20
4	18020-E4100....	BRACKET-accelerator pedal	2	S20
5	18021-E4100....	BUSH-accelerator pedal (nylon)	2	S20
6	18019-E4100....	RING-slip, accelerator shaft	1	S20
7	08363-61214....	BOLT-with lock washer	4	S20
8	18017-E4100....	BOLT-special	1	S20
9	08911-10610....	NUT	1	S20
8	18017-E8701....	BOLT-special (from C/# PS30-000501)	1	S20
9	08911-10810....	NUT	1	S20
10	18123-E4200....	BRACKET ASS'Y-bell crank	1	S20
11	08911-10610....	NUT	1	S20
12	08915-13610....	WASHER-lock	1	S20
13	08360-61414....	BOLT-with washer	2	S20
14	18137-10600....	RING-snap	1	S20

1974, 3

FIG. **206-A** NISSAN MOTOR CO., LTD.

KEY No.	PART NO.	PART NAME	QTY	MODELS
15	18124–73000....	BUSH-nylon	2	S20
16	18310–E4200....	BRACKET ASS'Y-auxiliary crank	1	S20
17	08911–10610....	NUT	2	S20
18	08915–13610....	WASHER-lock	2	S20
19	18137–10600....	RING-snap	1	S20
20	18124–73000....	BUSH-nylon	1	S20
21	18121–E4201....	BELL CRANK ASS'Y-accelerator	1	S20
	18121–E4202....	BELL CRANK ASS'Y-accelerator (from '70-5)	1	S20
22	18150–E4200....	BELL CRANK ASS'Y-accelerator	1	S20
23	18200–E4100....	**BALL JOINT ASS'Y**	1	S20
	18200–E4101....	**BALL JOINT ASS'Y (from '70-5)**	1	S20
	18200–E4102....	**BALL JOINT ASS'Y**	1	S20
24	18131–E4100....	BALL JOINT	1	S20
25	08911–10410....	NUT	1	S20
26	18135–E4100....	PLATE-accelerator stopper	1	S20
27	18218–E4101....	BOOT-accelerator rod	1	S20
	18218–E4102....	BOOT-accelerator rod	1	S20
28	18130–E4200....	**BALL JOINT ASS'Y**	1	S20
	18130–E4201....	**BALL JOINT ASS'Y (from '70-5)**	1	S20
	18210–E4200....	**BALL JOINT ASS'Y**	1	S20

KEY No.	PART NO.	PART NAME	QTY	MODELS
29	18131–E4100....	BALL JOINT	2	S20
30	08911–10410....	NUT	2	S20

E 2

FIG. 206-B NISSAN MOTOR CO., LTD.

CHOKE & THROTTLE CONROL

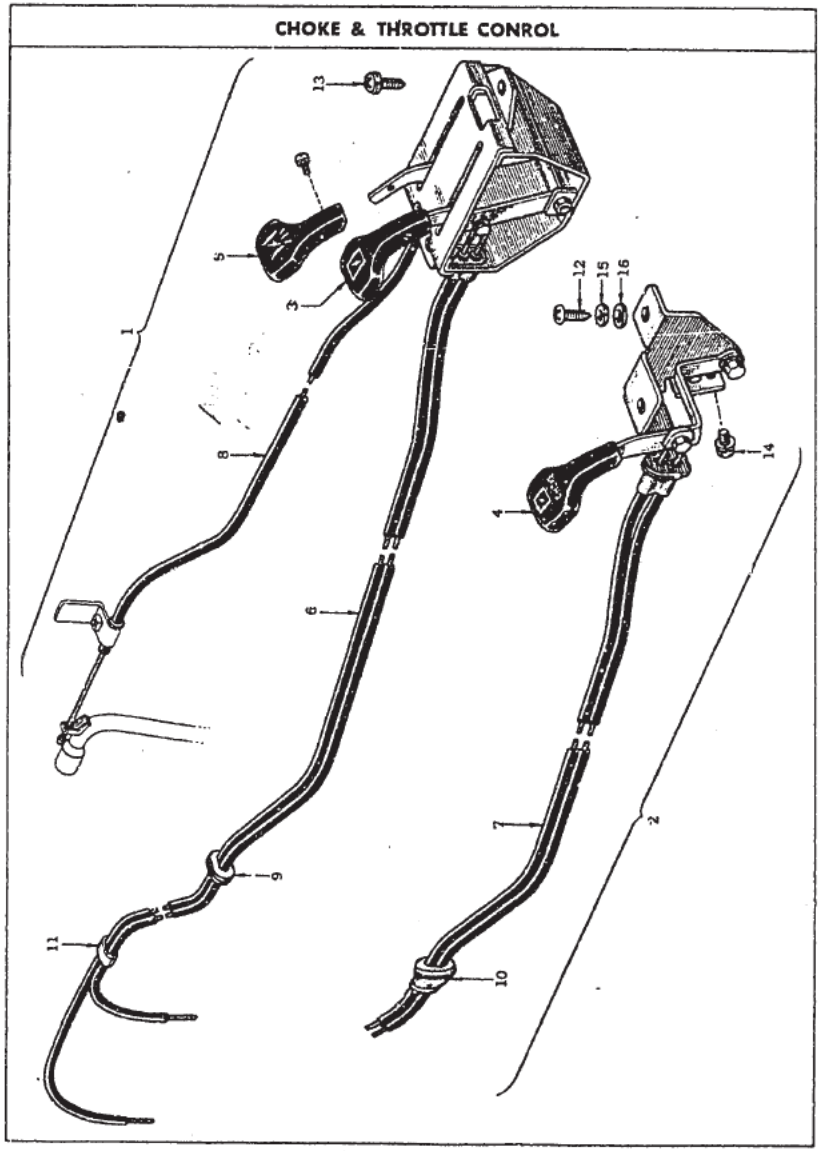

NISSAN MOTOR CO. LTD. FIG. 206-B

KEY No	PART NO	PART NAME	QTY	MODELS

S30-00247
45/01

CHOKE & THROTTLE CONTROL

1	18410-E4101....	CONTROL ASS'Y-choke & throttle		1	M-all (G20EVGは除く)
(1)	18410-E4102....	CONTROL ASS'Y-choke & throttle (from C/#S30-01154)		1	M-all △
(1)	18410-E4103....	CONTROL ASS'Y-choke & throttle (from '70-5)		1	M-all × 注1.
(1)	18410-E4104....	CONTROL ASS'Y-choke & throttle (from '71-3)		1	M-all △
2	18410-E8700....	CONTROL ASS'Y-choke	from '72 model	1	M-all (L20) × 注2.
(2)	18410-E8800....	CONTROL ASS'Y-choke	from '72 model	1	M-all (L24) × 注2.
(2)	18410-E8701....	CONTROL ASS'Y-choke	from '72-5	1	M-all (L20) △
(2)	18410-E8801....	CONTROL ASS'Y-choke	from '72-5	1	M-all (L24) △
(2)	18410-E8702....	CONTROL ASS'Y-choke (ワイヤー2本の長さがちがう 1520mm 1410mm)	for service only	1	M-all (L20) ○
(2)	18410-E8803....	CONTROL ASS'Y-choke	for service only	1	M-all (L24) ○
(2)	18410-N3001....	CONTROL ASS'Y-choke (ワイヤー2本の長さが同じ 1935mm)	from '73-4	1	M-all (L20) × 注3.
(2)	18410-N3101....	CONTROL ASS'Y-choke	from '73-4	1	M-all (L24) × 注3.
1	18410-E4501....	CONTROL ASS'Y-choke & throttle		1	A-all
(1)	18410-E4502....	CONTROL ASS'Y-choke & throttle (from C/#S30-01154)		1	A-all △
2	18410-E8700....	CONTROL ASS'Y-choke	from '72 model	1	A-all (L20) × 注2.
(2)	18410-E8800....	CONTROL ASS'Y-choke	from '72 model	1	A-all (L24) × 注2.
(2)	18410-E8701....	CONTROL ASS'Y-choke	from '72-5	1	A-all (L20) △
(2)	18410-E8801....	CONTROL ASS'Y-choke	from '72-5	1	A-all (L24) △

注1. ボデー変更に関連しスロットルワイヤー変更。 注2. スロットル ワイヤーを廃止。
注3. 排気ガス規制の関連変更。

1974, 3

FIG. 206-B NISSAN MOTOR CO., LTD

KEY No.	PART NO.	PART NAME	QTY	MODELS
(2)	18410-E8702....	CONTROL ASS'Y-choke for service only	1	A-all (L20)
(2)	18410-E8803....	CONTROL ASS'Y-choke for service only	1	A-all (L24)
(2)	18410-N3001....	CONTROL ASS'Y-choke from '73-4	1	A-all (L20)
(2)	18410-N3101....	CONTROL ASS'Y-choke from '73-4	1	A-all (L24)
(1)	18410-E4201....	CONTROL ASS'Y-choke & throttle	1	PZ
(1)	18410-E4202....	CONTROL ASS'Y-choke & throttle (from '70-2)	1	PZ
(1)	18410-E4203....	CONTROL ASS'Y-choke & throttle (from '70-5)	1	PZ
(1)	18410-E4204....	CONTROL ASS'Y-choke & throttle (from '71-3)	1	PZ
(1)	18410-E8710....	CONTROL ASS'Y-choke & throttle (from C/# PS30-000501)	1	PZ
2	18410-E8711....	CONTROL ASS'Y-choke & throttle (from '72-5)	1	PZ
3	18415-E4100....	KNOB-choke control	1	ZS,ZL,PZ
(3)	18415-E4101....	KNOB-choke control (from '70-2)	1	ZS,ZL,ZA,PZ
4	18415-E8700....	KNOB-choke control (from C/# S30-007501, PS30-000501)	1	L20,L24,PZ
5	18515-E4100....	KNOB-throttle control	1	ZS,ZL,PZ
	18515-E4101....	KNOB-throttle control (up to C/# S30-007500, PS30-000500)	1	ZS,ZL,ZA,PZ
6	18491-E4100....	WIRE ASS'Y-choke control	1	L20
7	18491-E8700....	WIRE ASS'Y-choke control (from C/# S30-007501) ..	1	L20
(7)	18491-E8800....	WIRE ASS'Y-choke control (from C/# S30-010001) ..	1	L24
(7)	18491-N3301....	*WIRE ASS'Y-choke control (from '73-4)	1	L20, L24

注3. 注1.

NISSAN MOTOR CO. LTD. FIG. 206-B

KEY No.	PART NO.	PART NAME	QTY	MODELS
(6)	18491-E4100....	WIRE ASS'Y-choke control	1	S20
(7)	18491-E8710....	WIRE ASS'Y-choke control (from C/# PS30-000501)	1	S20
8	18490-E4100	WIRE ASS'Y-throttle control	1	ZS,ZL,PZ
	18490-E4101....	WIRE ASS'Y-throttle control (up to C/#S30-007500, PS30-000500)	1	ZS,ZL,ZA,PZ
9	*18452-E4100....	GROMMET-rubber	1	PZ
10	18453-E4100....	GROMMET-rubber	1	L20
	18453-E8700....	GROMMET-rubber	1	L20, L24
11	18153-G0300....	CLIP-outer casing choke	1	L20, L24
	18431-E8700....	CLIP-outer casing choke (from '71-5)	1	L20, L24
12	01421-00123....	SCREW	2	L20, L24, PZ
13	08310-51014....	SCREW-with lock washer	2	L24
14	08313-51214....	SCREW-with lock washer	2	L20
15	08915-13510....	WASHER-lock	2	L20, L24, PZ
16	08915-43510....	WASHER-plain	2	L20, L24, PZ

FIG. 207 -A NISSAN MOTOR CO. LTD.

EXHAUST TUBE & MUFFLER (L20·L24)

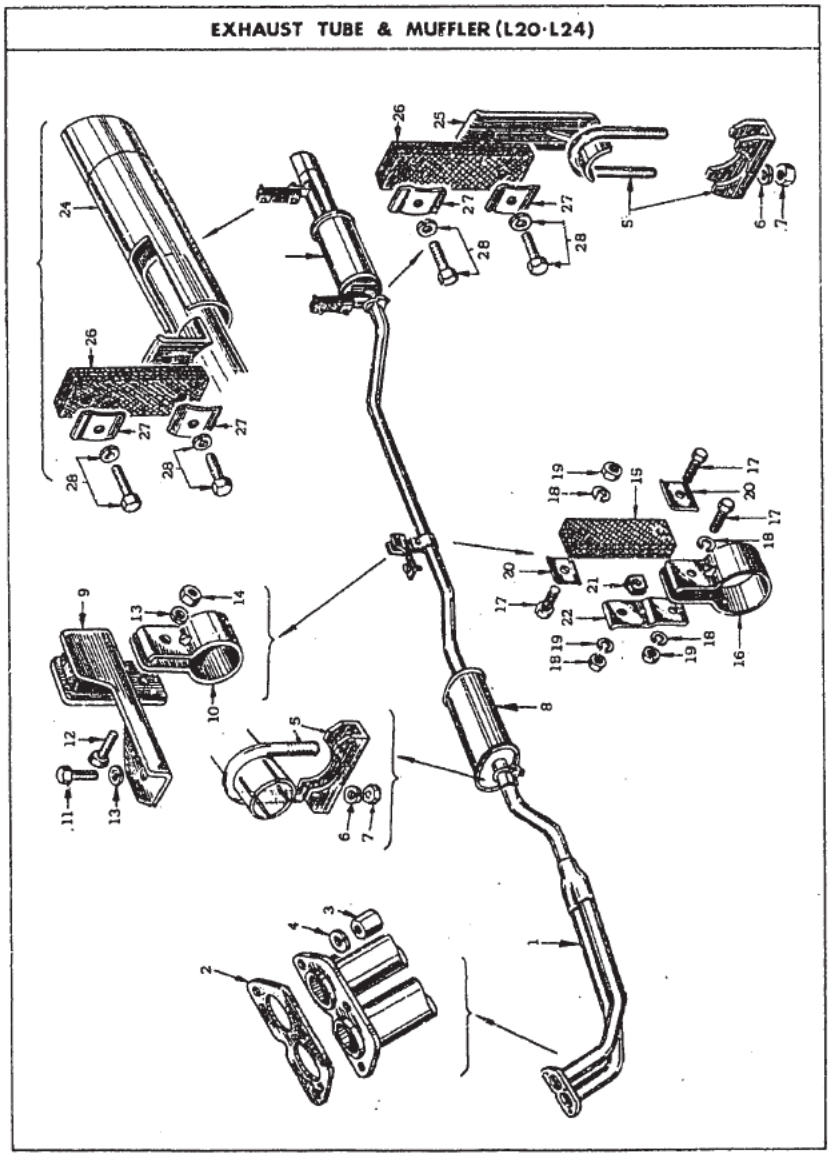

NISSAN MOTOR CO., LTD. FIG. 207 -A

KEY No.	PART NO	PART NAME	QTY	MODEL

EXHAUST TUBE & MUFFLER (L20, L24)

1	20010—E4100....	TUBE ASS'Y-exhaust front	1	ZS, ZL ┐
	20010—E8700....	TUBE ASS'Y-exhaust front (from C/#S30-007501)	1	M-all ┐ △
	20010—N3000....	TUBE ASS'Y-exhaust front (from '72·10)	1	M-all ┘ △(注)
	20010—E4700....	TUBE ASS'Y-exhaust front	1	ZA ┐ ×
	20010—E8720....	TUBE ASS'Y-exhaust front (from C/#S30-007501)	1	A-all ┐ × △(注)
	20010—N3020....	TUBE ASS'Y-exhaust front (from '73·2)	1	A-all ┘
2	20711—E3200....	GASKET-exhaust tube	1	L20, L24
3	20602—A7100....	NUT-fixing tube	3	L20, L24
4	08915—43810....	WASHER-lock	3	L20, L24
5	20680—78551....	CLAMP ASS'Y-bolt	2	L20, L24
6	08915—13810....	WASHER-lock	4	L20, L24
7	08111—10810....	NUT	4	L20, L24
8	20050—E4150....	TUBE ASS'Y-center with pre muffler	1	L20, L24 ┐ △
	20050—E4156....	TUBE ASS'Y-center with pre muffler	1	L20, L24 ┘ △
9	20621—E4100....	RUBBER ASS'Y-exhaust mounting	1	L20 ┐
10	20625—E4100....	CLAMP-exhaust mounting	1	L20
11	08114—02010....	BOLT	1	L20
12	08114—03010....	BOLT	1	L20 ┘

(注) 新部品はKey No.29シーラント キットを御使用下さい。

1974, 3

FIG. 207-A NISSAN MOTOR CO., LTD.

KEY No.	PART NO	PART NAME	QTY	MODELS	
13	08915-14010....	WASHER-lock	2	L20	×
14	08911-14010....	NUT	1	L20	×
15	20640-18000....	STRAP-exhaust hanger (from C/# S30-007501)	1	L20, L24	
16	20625-E8200....	CLAMP-exhaust mounting	1	L20, L24	
17	08110-82510....	BOLT	3	L20, L24	
18	08915-13810....	WASHER-lock	3	L20, L24	
19	08911-10810....	NUT	2	L20, L24	
20	20641-18000....	WASHER-plain	2	L20, L24	
21	20623-E8200....	JOINT SHEET-exhaust tube	3	L20, L24	
22	20624-E8700....	JOINT-exhaust tube	1	L20, L24	
23	⑩ 20100-E4100....	**MUFFLER ASS'Y-with tail tube**	1	L20, L24	○
	⑩ 20100-N3000....	**MUFFLER ASS'Y-with tail tube**	1	L20, L24	○
24	20105-E4100....	FINISHER-tail tube	1	L20, L24	
25	20651-E4100....	BRACKET ASS'Y-exhaust tube mounting front	1	L20, L24	×
	20651-N3000....	BRACKET ASS'Y-exhaust tube mounting front (from '73-2)	1	L20, L24	×
26	20640-18000....	STRAP-exhaust tube hanger	1	L20, L24	
27	20641-18000....	WASHER-plain	4	L20, L24	
28	08110-83062....	BOLT-with washer	4	L20, L24	
	20720-N2225....	SEALANT KIT-exhaust tube joint (from '72-9)	1	L20, L24	

NOTE

●エレファント　フォーミュラ

高温高速運転時の耐久性にすぐれ常に最高の
エンジン性能を発揮でき信頼度は抜群です。

エレファント
モーターオイル
日産純正

i 2

FIG. 207-B NISSAN MOTOR CO., LTD.

EXHAUST TUBE & MUFFLER (OPTIONAL PARTS)

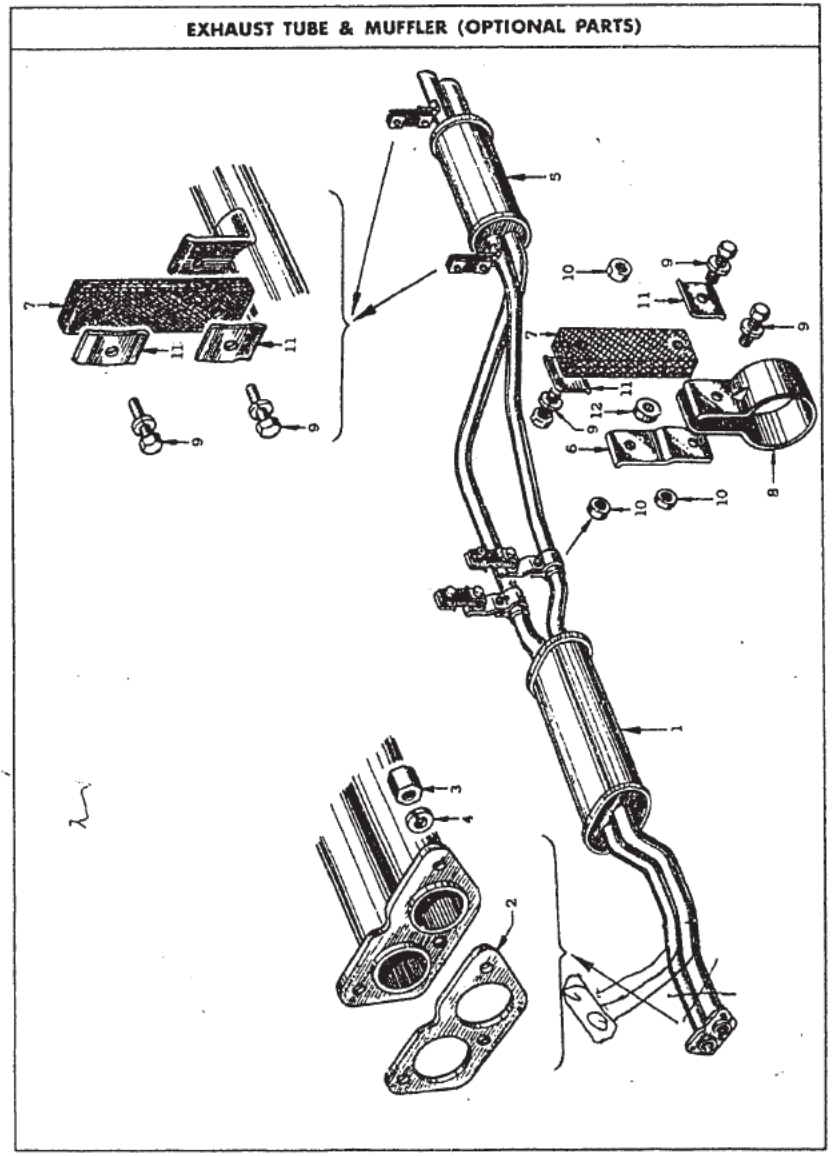

KEY No.	PART NO.	PART NAME	QTY	MODELS
		EXHAUST TUBE & MUFFLER (Optional parts)		
		(L20, L24 MANUAL TRANSMISSION取付車専用)		
1	20010-E4105....	**TUBE ASS'Y-exhaust front**	1	(op.) L20
	20010-E8730....	**TUBE ASS'Y-exhaust front (from C/#S30-007501)**	1	(op.) M-all
2	20711-E3200....	GASKET-exhaust tube	1	(op.) M-all
3	20602-A7100....	NUT-fixing tube	3	(op.) M-all
4	08915-43810....	WASHER-lock	6	(op.) M-all
5	20050-E8710....	TUBE ASS'Y-center with pre muffler	1	(op.) M-all
6	20624-E8710....	JOINT-exhaust tube mounting	2	(op.) M-all
7	20640-18000....	STRAP-exhaust tube hanger	4	(op.) M-all
8	20625-E8710....	CLAMP-exhaust tube mounting	2	(op.) M-all
9	08110-82562....	BOLT	10	(op.) M-all
10	08911-10810....	NUT	5	(op.) M-all
11	20641-18000....	WASHER-plain	8	(op.) M-all
12	20623-E8200....	JOINT SHEET-exhaust tube	2	(op.) M-all

・届出NO 44-自車オ1072にて届出してある。

・本部品の適用範囲

S44年10月～S50年7月。(但し、2+2 は除く)

1973. 7

FIG. 208 NISSAN MOTOR CO., LTD.

EXHAUST TUBE & MUFFLER (S20)

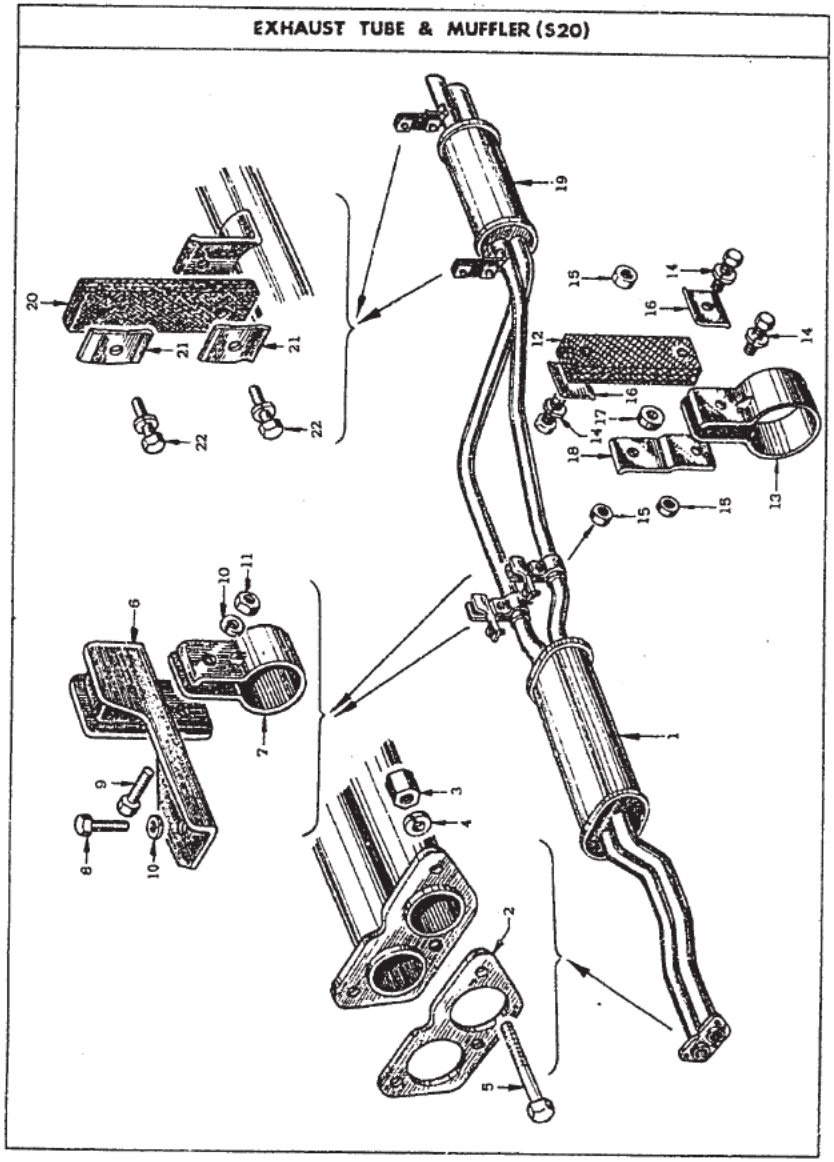

KEY No.	PART NO	PART NAME	QTY	MODELS
		EXHAUST TUBE & MUFFLER (S20) (up to '72 model)		
1	20010–E4201....	TUBE ASS'Y-exhaust with muffler	1	S20
(1)	20010–E8710....	TUBE ASS'Y-exhaust with muffler (from C/# PS30-000501)	1	S20
2	20711–A0200....	GASKET-exhaust tube	1	S20
3	20602–A7100....	NUT	3	S20
4	08915–43810....	WASHER-lock	6	S20
5	08130–83510....	BOLT	3	S20
6	20621–E4100....	RUBBER ASS'Y-exhaust mounting	2	S20
7	20625–E4200....	CLAMP-exhaust mounting	2	S20
	20626–E4200....	CLAMP-exhaust mounting	1	S20
8	08114–02010....	BOLT	2	S20
9	08114–03010....	BOLT	2	S20
10	08915–14010....	WASHER-lock	4	S20
11	08911–14010....	NUT	2	S20
12	20640–18000....	STRAP-exhaust hanger (from C/# PS30-000501)	2	S20
13	20625–E8710....	CLAMP-exhaust	2	S20
14	08110–82562....	BOLT-with lock washer	6	S20
15	08911–10810....	NUT	5	S20
16	20641–18000....	WASHER-plain	4	S20

1974, 3

FIG. 208 NISSAN MOTOR CO. LTD.

KEY No	PART NO.	PART NAME	QTY	MODELS
17	20623–E8200....	JOINT SHEET-exhaust	2	S20
18	20624–E8700....	JOINT-exhaust tube	1	S20
	20624–E8710....	JOINT-exhaust tube (from '72-8)	1	S20
19	20050–E4200....	TUBE ASS'Y-exhaust with booster	1	S20
	20050–E8710....	TUBE ASS'Y-exhaust with booster (from C/# PS30-000501)	1	S20
20	20640–18000....	STRAP-exhaust hanger	2	S20
21	20641–18000....	WASHER-plain	4	S20
22	08110–82562....	BOLT-with lock washer	4	S20
	20651–E4200....	BRACKET ASS'Y-exhaust mounting side	1	S20

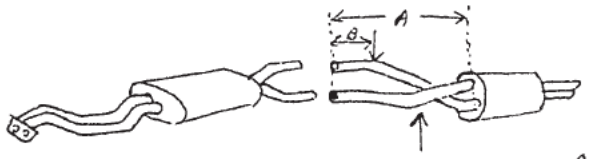

	A寸法	B寸法
20650-E4200	1213	143
20650-E8710	1178	108

この差35を55に縮めればOK

S30-1

NOTE

●エレファント　フォーミュラ

国際ラリーやレースにおける輝かしい実績と豊富な経験を活かして開発に成功した高性能車用の画期的なモーターオイルです。

エレファント
モーターオイル

日産純正

FIG. 209 NISSAN MOTOR CO., LTD.

RADIATOR

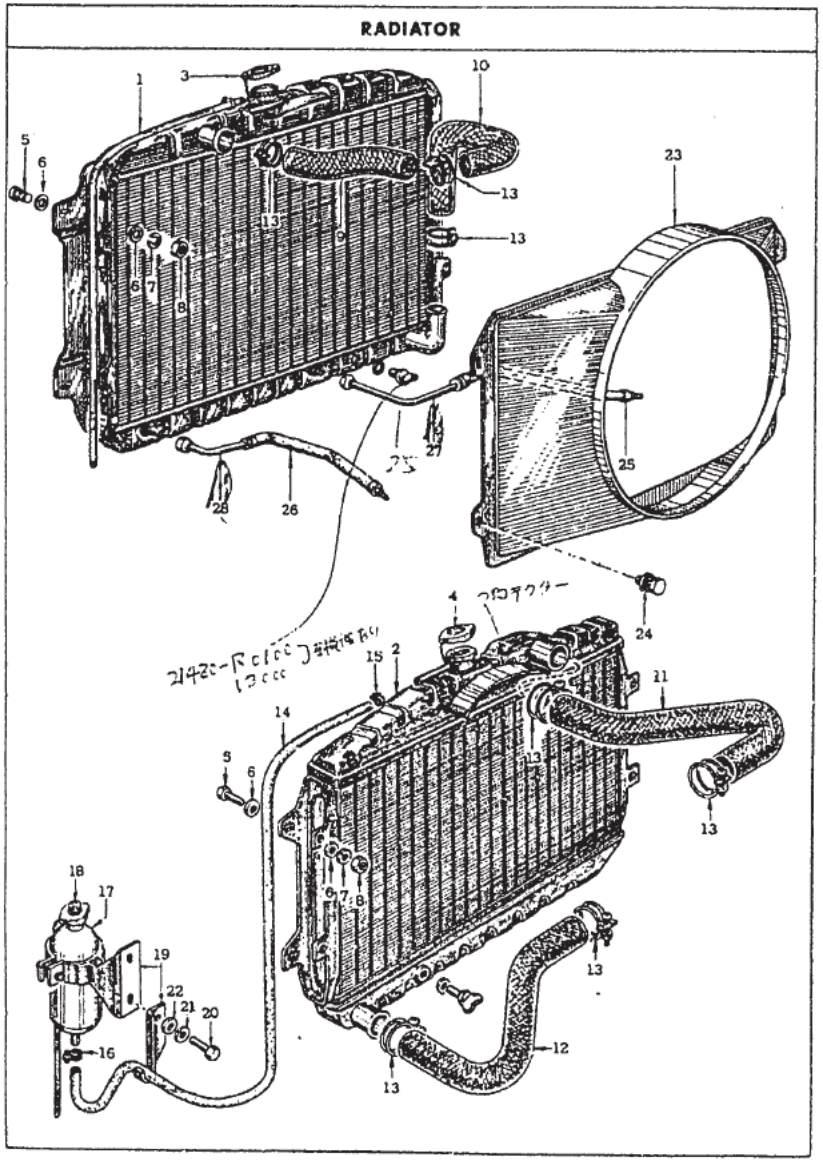

KEY No	PART NO	PART NAME	QTY	MODELS

RADIATOR

KEY No	PART NO	PART NAME	QTY	MODELS
(1)	21400–E4100....	RADIATOR ASS'Y (プロテクター無)	1	M-all
	21400–E4101....	RADIATOR ASS'Y (プロテクター付)		
2	21400–E4201....	RADIATOR ASS'Y	1	PZ, PZR (S20) 432 △
	21400–E4202....	RADIATOR ASS'Y アルミ材	1	PZ, PZR ☆
	21400–E4203....	RADIATOR ASS'Y (プロテクター無)	1	PZ, PZR
	21400–E4204....	RADIATOR ASS'Y (プロテクター付)		

☆印互換性はホース (21503-E4202) と同時互換により使用可能です。

KEY No	PART NO	PART NAME	QTY	MODELS
1	21400–E4500....	**RADIATOR ASS'Y (プロテクター無)**	1	A-all
	21400–E4501....	**RADIATOR ASS'Y (プロテクター付)**		
	21400–E4502....	**RADIATOR ASS'Y (for cooler)**	1	(op.) A-all
3	21430–10600....	CAP ASS'Y-radiator (エアーコン付)	1	L20, L24
4	21430–E4201....	CAP ASS'Y-radiator	1	S20
5	08110–82010....	BOLT (fixing radiator)	4	ALL
6	08915–43810....	WASHER-plain (fixing radiator)	4	ALL
7	08915–13810....	WASHER-lock (fixing radiator)	4	ALL
8	01221–00043....	NUT (fixing radiator)	4	ALL
9	21501–E3000....	HOSE-cylinder head to radiator	1	L20, L24 ×
	21501–N3000....	HOSE-cylinder head to radiator (from '73-2)	1	L20, L24

1974, 3

FIG. 209 NISSAN MOTOR CO. LTD

KEY No	PART NO	PART NAME	QTY	MODELS
10	21503--E4100....	HOSE-radiator to water pump	1	L20, L24
	21503--N3000....	HOSE-radiator to water pump (from '73-2)	1	L20, L24
11	21501--E4201....	HOSE-cylinder head to radiator	1	S20
12	21503--E4200....	HOSE-radiator to water pump	1	S20
	21503--E4202....	HOSE-radiator to water pump (from '70 model)	1	S20
13	08723--14400....	CLAMP-hose	4	ALL
14	21527--E4201....	HOSE-breather	1	S20
15	08723--12400....	CLAMP-hose	1	S20
	08723--11400....	CLAMP-hose	1	S20
16	21530--E4200....	CLAMP-breather hose	1	S20
17	21510--E4201....	TANK ASS'Y-reservoir	1	S20
18	21430--E4200....	CAP ASS'Y-push	1	S20
	21516--C0500....	CAP ASS'Y-push (from '70-1)	1	S20
19	21515--E4200....	BRACKET ASS'Y-reservoir tank	1	S20
	21515--E4201....	BRACKET ASS'Y-reservoir tank	1	S20
20	08460--82012....	BOLT	2	S20
21	08915--13810....	WASHER-lock	1	S20
22	08915--43810....	WASHER-plain	1	S20
23	21475--E4102....	SHROUD ASS'Y-radiator (エアーコン付)	1	(op.) ALL
24	08363--61226....	SCREW-with lock & plain washer	4	(op.) ALL

NISSAN MOTOR CO. LTD FIG. 20

KEY No	PART NO	PART NAME	QTY	MODELS
		TORQUE CONVERTER OIL COOLER		
25	21631--E4501....	HOSE ASS'Y-flexible (R.H.)	1	A-all
	21631--E4502....	HOSE ASS'Y-flexible (R.H.)	1	A-all
26	21632--E4502....	HOSE ASS'Y-flexible (L.H.)	1	A-all
	08911--34400....	NUT	2	A-all
27	21621--E3000....	TUBE ASS'Y-oil cooler	1	A-all
28	21623--E3000....	TUBE ASS'Y-oil cooler	1	A-all

1974.

FIG. 210 NISSAN MOTOR CO., LTD.

WIRING

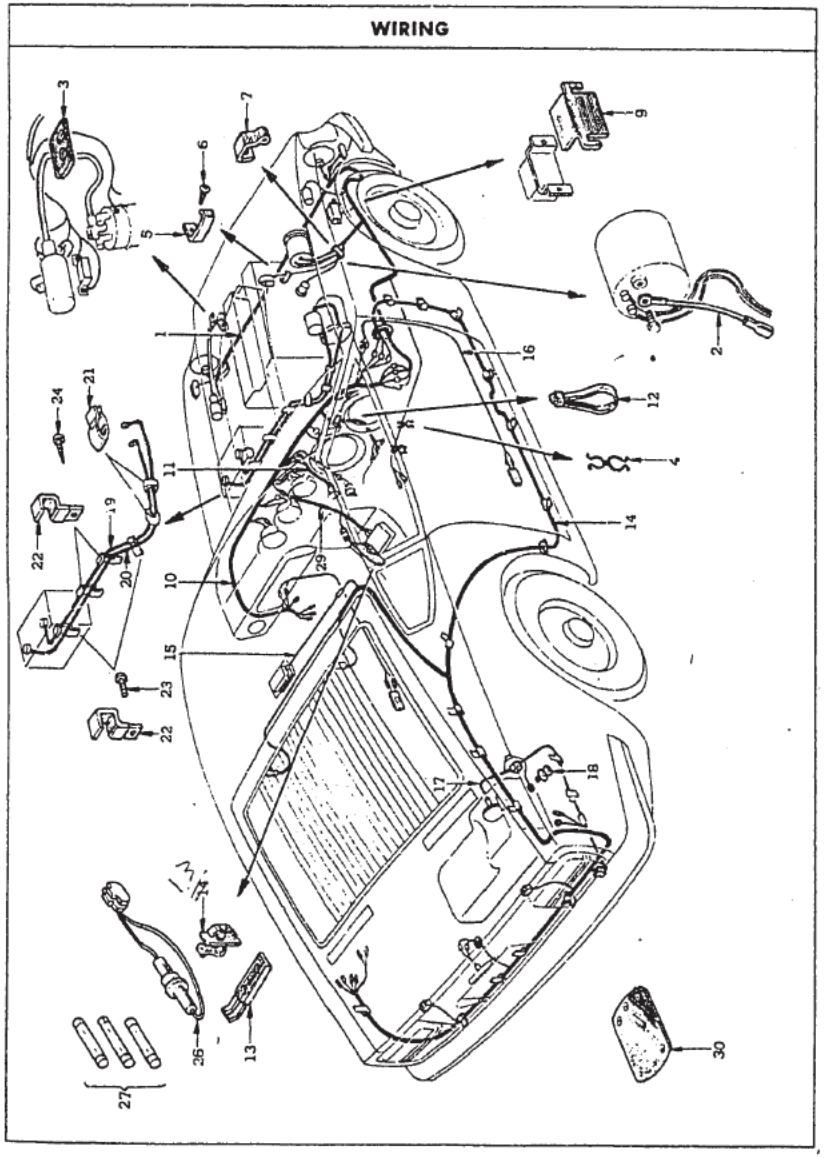

KEY No.	PART NO	PART NAME	Q'TY	MODELS
		WIRING		
1	24012−E4100....	HARNESS COMP.-engine room	1	ZS, ZL
	24012−E4101....	HARNESS COMP.-engine room (from '70-4)	1	ZS, ZL
	24012−E4102....	HARNESS COMP.-engine room (from '70-10)	1	M-all (exc. S20) 注1
	24012−N3000....	HARNESS COMP.-engine room (from '72-10)	1	M-all (exc. S20)
	24012−N3002....	HARNESS COMP.-engine room (from '73-3)	1	M-all (exc. S20) 注2
	24012−E7900....	HARNESS COMP.-engine room	1	ZA
	24012−E7901....	HARNESS COMP.-engine room (from '70-10)	1	A-all 注1
	24012−N3001....	HARNESS COMP.-engine room (from '72-10)	1	A-all
	24012−N3003....	HARNESS COMP.-engine room (from '73-3)	1	A-all 注2
	24012−E4200....	HARNESS COMP.-engine room	1	PZ
	24012−E4201....	HARNESS COMP.-engine room (from '70-10)	1	PZ 注1
	24012−N3005....	HARNESS COMP.-engine room (from '72-12)	1	PZ
	24012−E7201....	HARNESS COMP.-engine room	1	PZR
2	24022−E4100....	CABLE-fusible link	1	L20, S20
	24022−E4102....	CABLE-fusible link	1	L20, S20
	24022−E8200....	CABLE-fusible link	1	ALL
3	22472−E4100....	CLAMP-cable	1	L20, L24
	22472−E8000....	CLAMP-cable (from '73-3)	1	L20, L24

注1. 端子変更
注2. 排気ガス対策

1974, 3

FIG. 210 NISSAN MOTOR CO., LTD.

KEY No.	PART NO.	PART NAME	Q'TY	MODELS
4	24220–E4101....	CLIP	1	L20, L24
5	24210–E4101....	CLIP-wiring	1	L20, L24
	24210–E4103....	CLIP-wiring	1	S20
	24210–B0700....	CLIP	2	PZR
6	08510–51012....	SCREW-tapping	2	PZR
7	24210–E4200....	CLIP	1	S20
8	★24046–90096....	*CLIP	2	ALL (exc. PZR)
9	24027–E4100....	COVER-voltage regulator	1	ALL
10	24013–E4100....	HARNESS COMP.-instrument	1	ZS, ZL
	24013–E4101....	HARNESS COMP.-instrument (from '70-1)	1	ZS, ZL
	24013–E4102....	HARNESS COMP.-instrument (from '70-4)	1	ZS, ZL 注3.
	24013–E4103....	HARNESS COMP.-instrument (from '70-10)	1	ZS, ZL 注4.
	24013-E4200	HARNESS COMP-INST (N-7002)		PZ
★	24013–E8200....	HARNESS COMP.-instrument (from '73 model)	1	ZS, ZL 注5.
	24013-E4201	HARNESS COMP-INST (7002-7010)		PZ
★	24013–E8700....	HARNESS COMP.-instrument (from '72 model)	1	M-all (exc. S20)
	24013-E4202	HARNESS COMP-INST (7010-7105)		PZ
★	24013–N3000....	HARNESS COMP.-instrument (from '72-10)	1	M-all
	24013-E8204	HARNESS COMP-INST (7105-72 MODEL)		PZ
★	24013–N3002....	HARNESS COMP.-instrument (from '73-3)	1	M-all (exc. PZ)
	24013-E8705	HARNESS-COMP-INST (72 MODEL-73 MODEL)		PZ
★	24013–E7901....	HARNESS COMP.-instrument	1	ZA
	24013-N3005	HARNESS COMP-INST (73 MODEL--		PZ
	24013–E8201....	HARNESS COMP.-instruments(from '71 model)	1	A-all 注5.
	24013–E8701....	HARNESS COMP.-instrument (from '72 model)	1	A-all
	24013–N3001....	HARNESS COMP.-instrument (from '72-10)	1	A-all

注3. アーススイッチ方式
注4. 電源スイッチ方式
注5. 回路変更

NISSAN MOTOR CO., LTD. FIG. 210

KEY NO.	PART NO.	PART NAME	Q'TY	MODELS
	24013–N3003....	HARNESS COMP.-instrument (from '73-3)	1	A-all
	24013–E7202....	HARNESS COMP.-instrument	1	PZR
	24013–E8205....	HARNESS COMP.-instrument (from '71 model)	1	PZR 注5.
	24013–E8706....	HARNESS COMP.-instrument (from '72 model)	1	PZR
	26713–89900....	BULB 12V x 3.4W	11	ALL
11	24031–N3000....	HARNESS-cigaret lighter (from '72-10)	1	ALL
12	24205–28500....	CLIP-wire	1	ALL
13	24251–E4100....	CLIP-fuel pump harness	1	PZ,PZR (op.) L20
14	99604–H1400....	*CLIP-fuel pump harness (from '73 model)	1	(op.) L20, L24
14	24014–E4100....	HARNESS COMP.-body	1	ZS, ZL
	24014–E4101....	HARNESS COMP.-body (from '70-1)	1	ZS, ZL
	24014–E4102....	HARNESS COMP.-body (from '70-4)	1	L20, L24
	24014–N3000....	HARNESS COMP.-body (from '72-12)	1	L20, L24
	24014–E4200....	HARNESS COMP.-body	1	PZ (S20 ENG)
	24014–E7201....	HARNESS COMP.-body	1	PZR (— —)
15	24016–E4100....	HARNESS-room lamp	1	ALL
16	24017–E4100....	HARNESS-step lamp	1	(op.) ALL
17	24015–E8200....	HARNESS-fuel tank	1	ALL
18	08360–51212....	SCREW-with washer	1	ALL

注5. 回路変更

1974, 3

A 3

FIG. 210 NISSAN MOTOR CO., LTD.

KEY NO.	PART NO.	PART NAME	Q'TY	MODELS
19	24080-E4100....	CABLE ASS'Y-battery	1	L20, L24
	24080-E4300....	CABLE ASS'Y-battery(寒地向)		
	24080-E4200....	CABLE ASS'Y-battery	1	S20
	24080-E4201....	CABLE ASS'Y-battery(寒地向)		
20	24110-E4100....	CABLE ASS'Y-battery	1	M-all (exc. PZ)
	24110-E4300....	CABLE ASS'Y-battery(寒地向)		
	24110-E4200....	CABLE ASS'Y-battery	1	PZ
	24110-E7900....	CABLE ASS'Y-battery	1	A-all
	24110-E8000....	CABLE ASS'Y-battery(寒地向)		
1	24220-89930....	CLIP	2	ALL ┐ × ┘
	24220-E8200....	CLIP (from '72-8)	2	ALL
2	24045-90003....	CLAMP-cable	4 / 3	ALL / PZ
3	08310-61014....	SCREW	2	ALL
4	08510-51212....	SCREW-tapping	2	ALL
5	08363-61214....	SCREW	1	ALL
6	24021-E4100....	HARNESS-fuel pump	1	(op.) L20 ┐ × ┘
	24021-E8200....	HARNESS-fuel pump (from '71 model)	1	(op.) ZL,ZA ZSA,HZ
27	25462-89901....	FUSE 20A	1	(op.) L20 ┐ ○ ┘
	08941-12000....	FUSE 20A	1	(op.) ZL,ZA ZSA,HZ
	25462-89901....	FUSE 20A	1	PZ

NISSAN MOTOR CO., LTD. FIG. 210

KEY NO.	PART NO.	PART NAME	Q'TY	MODELS
28	99604-H1400....	CLIP-fuel pump harness	1 / 2	(op.)ZL,ZA,ZSA,HZ / PZ
29	24024-E4100....	HARNESS-accessory	1	PZ ┐ × ┘
	24024-E4101....	HARNESS-accessory (from '70-10)	1	PZ ┐ × ┘ 注1
	24024-E8200....	HARNESS-accessory (from '71-9)	1	PZ
30	24025-E4100....	COVER-wiring	1	PZ
	24029-E4600....	ADAPTOR (for cooler)	1	(op.) ALL

注1. 端子変更

FIG. 211 NISSAN MOTOR CO., LTD.

BATTERY MOUNTING

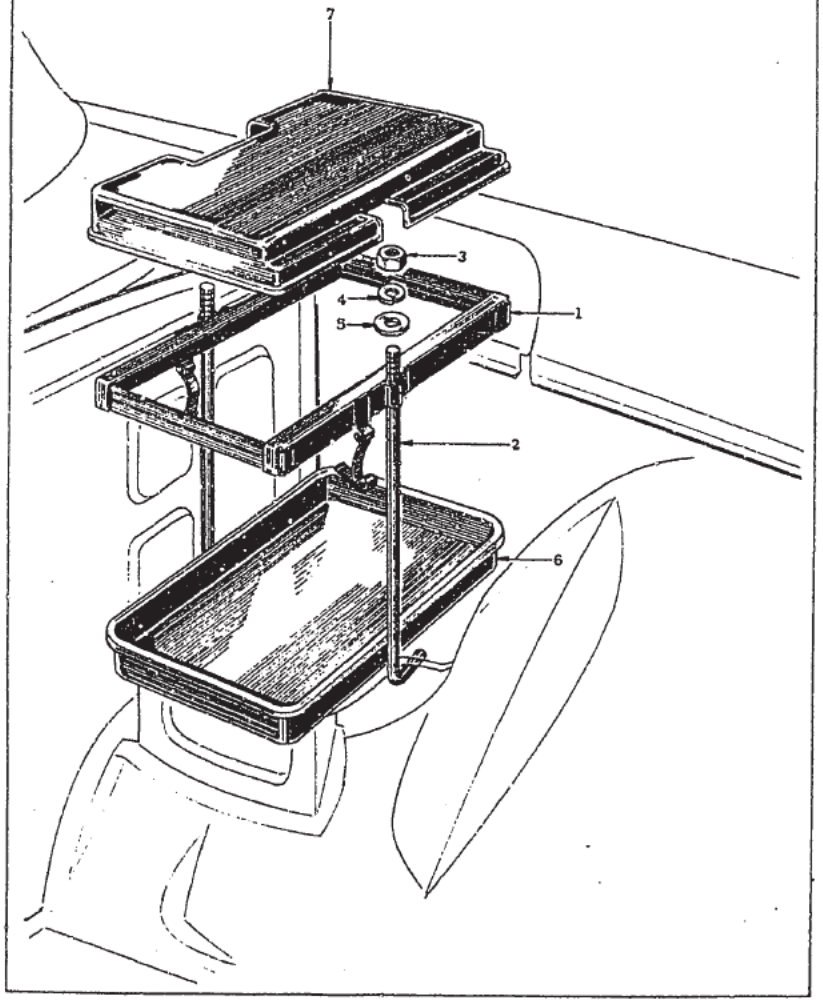

NISSAN MOTOR CO. LTD. FIG. 211

KEY No.	PART NO.	PART NAME	QTY	MODELS
		BATTERY MOUNTING		
1	24419-E4100....	FRAME ASS'Y-battery fixing	1	ALL
(1)	24420-E4600....	FRAME ASS'Y-battery fixing (寒地向)		
2	24438-21000....	ROD-battery support	2	ALL
3	08911-10610....	NUT	2	ALL
4	08915-13610....	WASHER-lock	2	ALL
5	08915-43610....	WASHER-plain	2	ALL
6	24428-E4100....	TRAY ASS'Y-battery	1	ALL
(6)	24428-E4600....	TRAY ASS'Y-battery (寒地向)		
7	24431-E4101....	COVER-battery	1	ALL
(7)	24431-E4600....	COVER-battery (寒地向)		
	24432-E4600....	CAP-battery cover (寒地向)	1	ALL

1974. 3

FIG. 212 NISSAN MOTOR CO., LTD.

METER

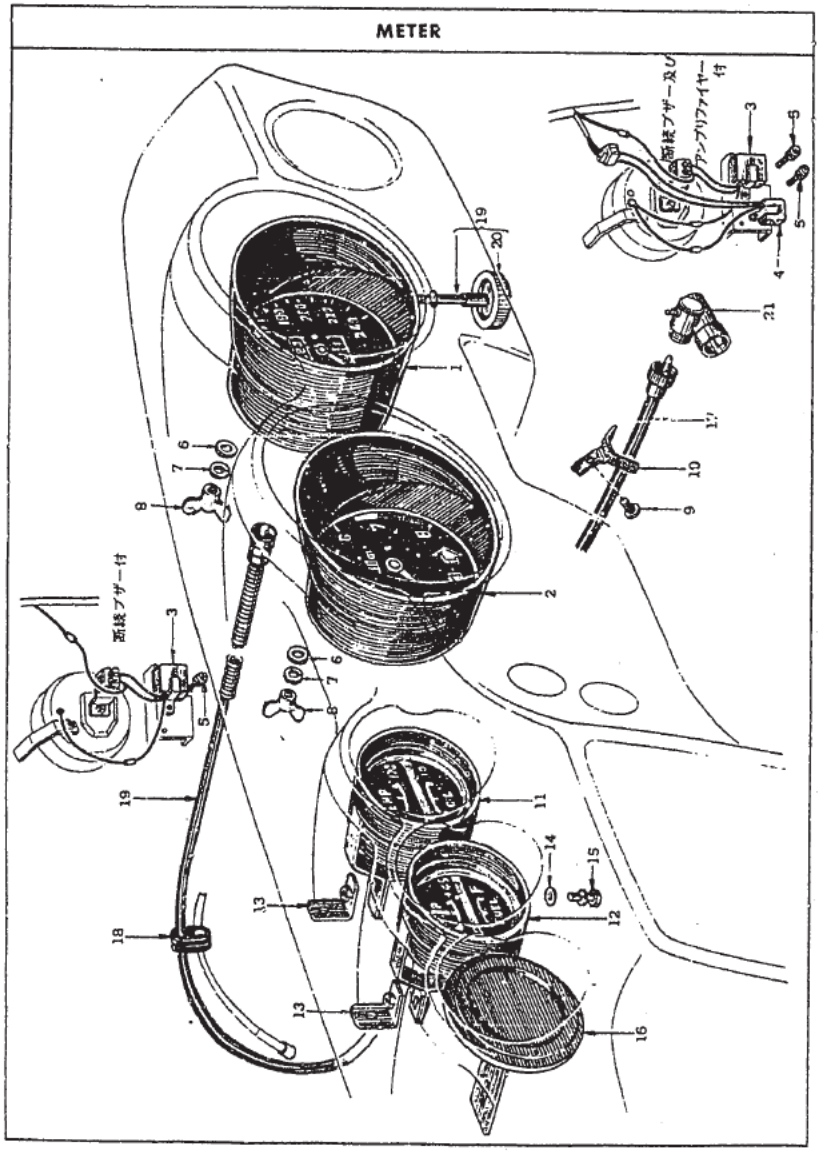

NISSAN MOTOR CO LTD. FIG. 212

KEY No.	PART NO	PART NAME	QTY	MODELS
		COMBINED METER		
1	24850-E4100....	SPEEDOMETER ASS'Y	1	L20 △
	~~24850-E8200~~	~~SPEEDOMETER ASS'Y~~		
	24850-E8201....	SPEEDOMETER ASS'Y (from C/# S30-04556)	1	ZS,ZA,ZSA × 注1
	24850-E8202....	SPEEDOMETER ASS'Y (from C/# S30-04556)	1	ZL 注1
	24850-E8203....	SPEEDOMETER ASS'Y (from C/# S30-00402)	1	L24, S20 注1
	24850-N3000....	SPEEDOMETER ASS'Y (from C/# S30-00402)	1	L20, 4 speed △ 注2
	24850-N3001....	SPEEDOMETER ASS'Y (from C/# S30-00402)	1	L20, 5 speed 注2
	24850-N3002....	SPEEDOMETER ASS'Y (from C/# S30-00402)	1	L24 注2
	24850-N3004....	SPEEDOMETER ASS'Y (from '72-11)	1	ZL, (op.) ZS △ 注3
	24850-N3005....	SPEEDOMETER ASS'Y (from '72-11)	1	L24, PZ 注3
	24850-N3006....	SPEEDOMETER ASS'Y (from '72-11)	1	ZS, ZA, ZSA 注3
	24850-N3007....	SPEEDOMETER ASS'Y (from '73-3)	1	ZL, (op.) ZS △ 注4
	24850-N3008....	SPEEDOMETER ASS'Y (from '73-3)	1	L24, PZ 注4
	24850-N3009....	SPEEDOMETER ASS'Y (from '73-3)	1	ZS, ZA, ZSA 注4
2	24855-E4100....	TACHOMETER ASS'Y	1	L20, L24 △
	24855-E8200....	TACHOMETER ASS'Y (from C/# S30-04556)	1	L20, L24 △
	24855-E4200....	TACHOMETER ASS'Y	1	S20 △
	24855-E8201....	TACHOMETER ASS'Y (from C/# PS30-00402)	1	S20 △ ← 不採用、旧引当品使用
3	25039-F1501....	RELAY-speedowarning (from '72-11)	1	ALL

注1. ブザー無　注2. 連続音ブザー付　注3. 断続音ブザー付
注4. 断続音ブザー及アンプリファイアー付

1974. 3

FIG. 212 NISSAN MOTOR CO. LTD.

KEY No.	PART NO	PART NAME	QTY	MODELS
4	25035–N3000....	AMPLIFIER (from '73-3)	1	ALL
5	08310–40814....	SCREW-with lock washer	2	ALL
6	74340–12161....	WASHER-special (fixing speedometer & tachometer)	4	ALL
7	08915–13510....	WASHER-lock (fixing speedometer & tachometer)	4	ALL
8	08913–40510....	NUT-wing (fixing speedometer & tachometer)	4	ALL
9	08510–51212....	SCREW-tapping	1	ALL
10	★24210–E4105....	*CLIP-speedometer cable	1	ALL
	24210–N3000....	CLIP-speedometer cable	1	ALL
11	24830–E4100....	GAUGE COMP.-water temperature & oil pressure	1	L20, S20
	24830–E8200....	GAUGE COMP.-water temperature & oil pressure (from C/# S30-04556)	1	ZS, ZL, ZA
	24830–E8201....	GAUGE COMP.-water temperature & oil pressure (from C/# PS30-00402)	1	S20
	24830–E8202....	GAUGE COMP.-water temperature & oil pressure (6kg) (from C/# S30-007501)	1	L20, L24
	24830–E8203....	GAUGE COMP.-water temperature & oil pressure (10kg) (from C/# PS30-000501)	1	S20
12	24840–E4100....	GAUGE COMP.-ammeter & fuel (60ℓ)	1	L20, PZ
	24840–E8200....	GAUGE COMP.-ammeter & fuel (60ℓ) (from C/# S30-04556, PS30-00402)	1	ALL (exc. PZR)
	24840–E7200....	GAUGE COMP.-ammeter & fuel (100ℓ)	1	PZR
	24840–E8201....	GAUGE COMP.-ammeter & fuel (100ℓ) (from C/# PS30-00402)	1	PZR
13	24831–E4100....	BRACKET ASS'Y-combination meter mounting	2	ALL
	24831–E8200....	BRACKET ASS'Y-combination meter mounting (from '72-8)	1	ALL
14	08915–43510....	WASHER-plain	4	ALL

KEY No.	PART NO.	PART NAME	QTY	MODELS
15	08313–51226....	SCREW-with lock & plain washer	4	ALL
16	68905–E4100....	MASK-clock aperture	1	Z-std.
17	25050–E4101....	SHAFT ASS'Y-flexible speedometer	1	L20, L24
	25050–E4201....	SHAFT ASS'Y-flexible speedometer	1	S20
18	24253–E4100....	GROMMET-cable	1	ALL
	24051–10600....	GROMMET-cable	1	ALL
19	25056–E4100....	CABLE ASS'Y-trip reset	1	ALL
20	24854–E4100....	KNOB-trip reset	1	ALL
21	32730–71802....	ADAPTOR-speedometer cable	1	S20
	27385–E4100....	CLOCK ASS'Y (ストップウォッチ付)	1	D-S30(op.-STD)
	27395–E4100....	OSCILLATOR ASS'Y	1	D-S30(op.-STD)
	27390–E4100....	CLOCK ASS'Y (2針)	1	(op.) STD

FIG. 213-1 NISSAN MOTOR CO., LTD

SWITCH & ELECTRIC UNIT

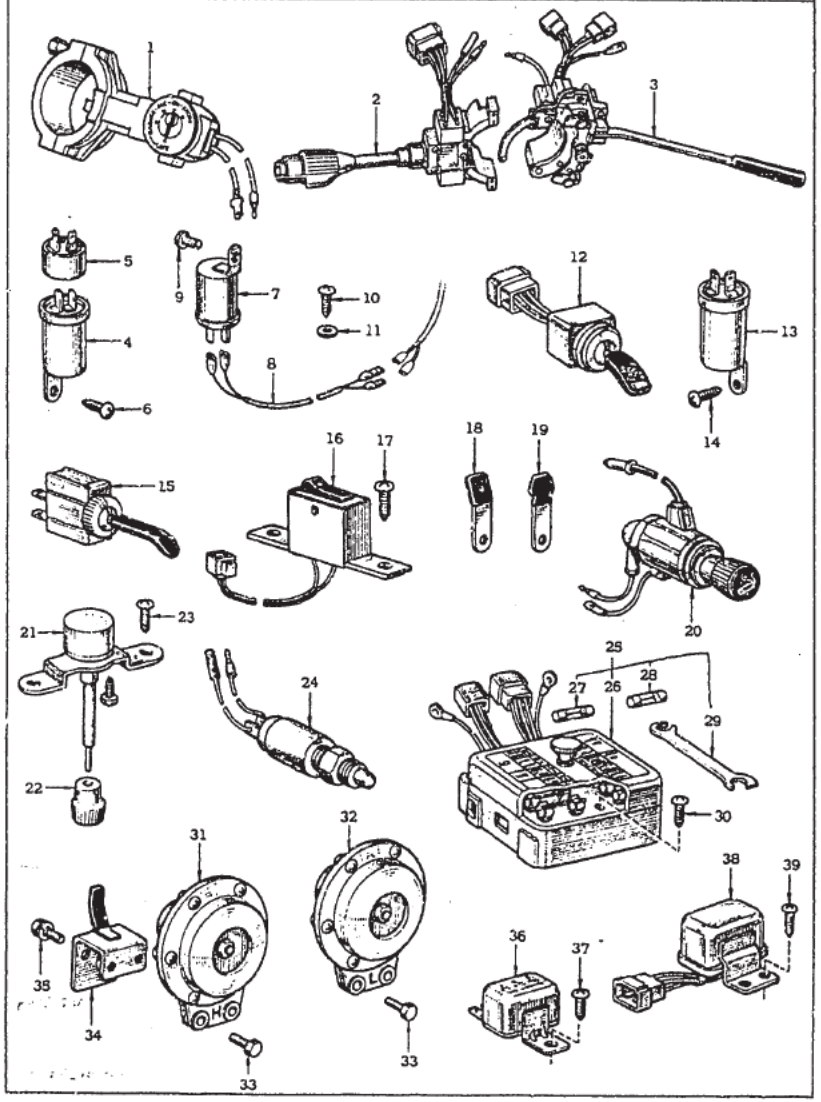

NISSAN MOTOR CO., LTD FIG. 213-2

SWITCH & ELECTRIC UNIT

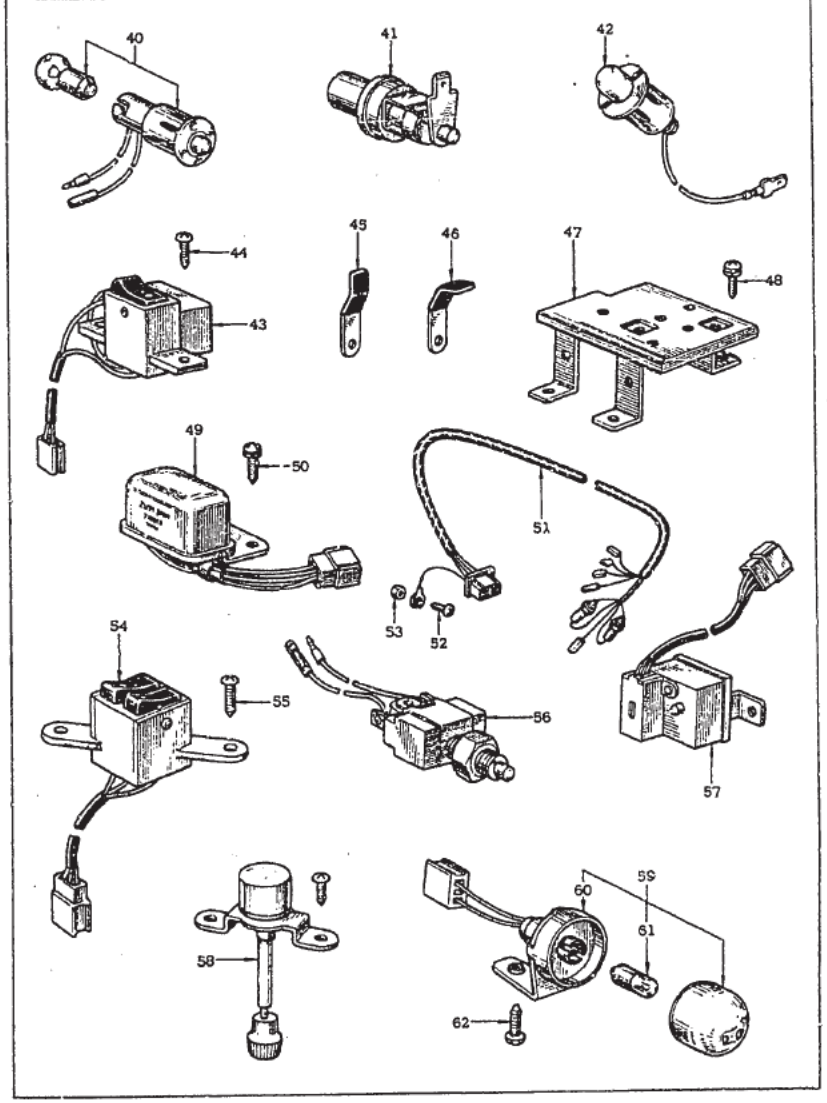

1974, 3

FIG. 213 NISSAN MOTOR CO., LTD.

KEY NO.	PART NO.	PART NAME	Q'TY	MODELS
		SWITCH & ELECTRIC UNIT		
1	48700–E4100....	**LOCK ASS'Y-steering with ignition**	1	L20, PZ
	48700–E4200....	**LOCK ASS'Y-steering with ignition (from C/#S30-04556, PS30-00402)**	1	ALL (exc. PZR)
	48700–N3000....	***LOCK ASS'Y-steering with ignition (from '73-5)**	1	ALL (exc. PZR)
	48700–N3010....	***LOCK ASS'Y-steering with ignition (from '73-5)**	1	(op.) ALL (exc. PZR)
	48750–E4700....	SWITCH ASS'Y-ignition & starter	1	L20, PZ
	48750–E7705....	SWITCH ASS'Y-ignition & starter	1	ALL (exc. PZR)
	25150–G0301....	SWITCH COMP.-ignition & starter	1	PZR
	25150–E8200....	SWITCH COMP.-ignition & starter (from C/# PS30-00402)	1	PZR
2	25160–E4100....	SWITCH COMP.-lighting & wiper	1	L20, S20
	25160–E4102....	SWITCH COMP.-lighting & wiper	1	L20, S20
	25160–E4101....	SWITCH COMP.-lighting & wiper (from '70-10)	1	ALL
3	25540–E4101....	SWITCH COMP.-turn signal & dimmer	1	Z-dx. HZG,HZGA (op. Z-std.)
	25540–E4100....	SWITCH COMP.-turn signal & dimmer	1	Z-std.
4	25520–89900....	UNIT ASS'Y-flasher 60W	1	Z20, S20
	25520–13200....	UNIT ASS'Y-flasher 60W	1	ALL
5	25529–89901....	RELAY ASS'Y-audible flasher	1	ALL
6	08310–51414....	SCREW (fixing flasher unit)	1	ALL

NISSAN MOTOR CO., LTD. FIG. 213

KEY NO.	PART NO.	PART NAME	Q'TY	MODELS
	25528–N3000....	**FLASHER UNIT SET (from '73-10)**	1	ALL
7	25520–89985....	FLASHER UNIT (from '73-10)	1	ALL 注1
8	25521–N3000....	HARNESS-extension	1	ALL
9	08310–51014....	SCREW	1	ALL
10	08510–61612....	SCREW-tapping	1	ALL
11	08915–43610....	WASHER-plain	1	ALL
12	25910–E4100....	SWITCH COMP.-hazard warning	1	ALL
13	25520–89911....	FLASHER UNIT ASS'Y-hazard	1	L20, S20
	25520–89960....	FLASHER UNIT ASS'Y-hazard	1	ALL
14	08310–51014....	SCREW	1	ALL
15	25370–E4100....	**SWITCH COMP.-fog lamp**	1	(op.) L20,S20
16	25370–E8701....	**SWITCH COMP.-fog lamp (from '72 model)**	1	(op.) ALL
17	01421–00083....	SCREW-tapping	1	(op.) ALL
18	24020–E8700....	CLIP	1	(op.) ALL
19	24020–E8704....	CLIP	1	(op.) ALL
20	25330–E4100....	CIGARETTELIGHTER COMP.	1	L20, S20
	25330–E8700....	CIGARETTELIGHTER COMP.	1	ALL
	25330–E8710....	CIGARETTELIGHTER COMP.(エアーコン付)		
	25330–N3000....	CIGARETTELIGHTER COMP. (from '73 model)	1	ALL

注1. 旧型車輛にコンデンサー式のユニットを使用する場合、エンジンとのクリアランスをとるため Key No.8のエクステンションハーネスを御使用下さい。

1974, 3

FIG. 213 NISSAN MOTOR CO., LTD.

KEY NO	PART NO.	PART NAME	Q'TY	MODELS
	25330–N3001....	CIGARETTELIGHTER COMP. (from '72-10)	1	ALL
	25330–N3010....	CIGARETTELIGHTER COMP. (エアーコン付) (from '72-10)	1	ALL
21	25950–E4600....	**RESISTER ASS'Y-instrument lamp**	1	L20, PZ
	25950–E4601....	**RESISTER ASS'Y-instrument lamp**	1	ALL (exc. PZR)
22	24854–E4100....	KNOB	1	ALL (exc. PZR)
	25950–E4100....	RESISTER ASS'Y-instrument lamp	1	PZR
23	08510–41212....	SCREW-tapping	2	ALL
24	25320-89910....	SWITCH ASS'Y-stop lamp	1	ALL
25	25410–E4100.Ω	**BLOCK ASS'Y-fuse**	1	L20, S20
	25410–E4101.Ω	**BLOCK ASS'Y-fuse** (from '73-10)	1	L20, S20
	25410–E8200....	**BLOCK ASS'Y-fuse (from C/# S30-04556, PS30-00402)**	1	L20, S20
	25410–E8700....	**BLOCK ASS'Y-fuse (from C/# S30-007501, PS30-00501)**	1	ALL
26	25420–E4100....	COVER ASS'Y-fuse block	1	L20, S20
	25420–E4101....	COVER ASS'Y-fuse block	1	L20, S20
	25420–E8700....	COVER ASS'Y-fuse block	1	ALL
27	25461–89901....	FUSE-10A	5	L20, S20
	08941–11000....	FUSE-10A	5	ALL
28	25462–89901....	FUSE-20A	7	L20, S20
	08941–12000....	FUSE-20A	7	ALL
29	*25421–E8700....	*CHANGER-fuse	1	ALL

NISSAN MOTOR CO., LTD. FIG. 213

KEY NO	PART NO.	PART NAME	Q'TY	MODELS
30	08313–52514....	SCREW	2	ALL
31	26310–E4100....	HORN ASS'Y-electric "high"	1	ALL
32	26330–E4100....	HORN ASS'Y-electric "low"	1	ALL
33	08110–82562....	BOLT	4	ALL
34	26315–E7200....	BRACKET-horn (エアーコン使用車)	2	(op.) ALL
35	08110–81462....	BOLT-with lock washer	4	(op.) ALL
36	26320–14800....	RELAY ASS'Y-horn	1	ALL
37	08310–51014....	SCREW	1	ALL
38	25230–89903....	RELAY ASS'Y-passing type-3	2	Z-dx,(op.)Z-std.
	25230–89903....	RELAY ASS'Y-passing type-3 (右側用) (from '73 model)	1	Z-dx,(op.)Z-std.
	25230–N3000....	RELAY ASS'Y-passing type-3 (左側用) (from '73 model)	1	Z-dx,(op.)Z-std.
39	08510–51612....	SCREW ASS'Y	2	Z-dx, (op.) Z-std.
40	25720–73000....	SWITCH ASS'Y-glove box with lamp	1	Z-dx, (op.) Z-std.
41	25360–89901....	SWITCH ASS'Y-door	2	ALL
42	36011–89900....	SWITCH ASS'Y-hand brake pilot	1	ALL
43	25350–E4101....	SWITCH COMP.-heat glass LESS BULB	1	ALL (exc. Z-std.)
	25350–E8201....	SWITCH COMP.-heat glass WITH BULB (from C/# S30-04556, PS30-00402)	1	ALL (exc. Z-std.)
	25350–E8701....	*SWITCH COMP.-heat glass (from C/# S30-007501, PS30-00501)	1	Z-dx, (op.) Z-std.
	25750–G0301....	SWITCH COMP.-heat glass (from C/# S30-04556, PS30-00402)	1	PZR
44	01421–00083....	SCREW-tapping	2	ALL

1974, 3

FIG. 213 NISSAN MOTOR CO., LTD.

KEY NO.	PART NO.	PART NAME	Q'TY	MODELS
45	24020-E8703....	CLIP-harness	1	ALL
46	24020-E8702....	CLIP-harness	1	ALL
47	25526-N3000....	BRACKET-relay combination	1	ALL
48	08316-61614....	SCREW-with lock washer	1	ALL
49	25230-E4100....	RELAY ASS'Y-heat glass & cooler	1	ALL
50	08310-51014....	SCREW-with lock washer	2	ALL
51	24024-E4100....	HARNESS-accessory switch	1	ALL (exc. PZR)
52	08310-31262....	SCREW	2	ALL
53	08911-10310....	NUT	2	ALL
54	25750-E4100....	SWITCH COMP.-parking lamp	1	L20, PZR
	25750-E8700....	SWITCH COMP.-parking lamp (from C/# S30-007501, PS30-000501)	1	ALL (exc. PZR)
55	01421-00083....	SCREW-tapping	2	ALL
56	25390-20300....	SWITCH ASS'Y-kick down	1	A-all
57	27395-E4100....	OSCILLATOR ASS'Y-clock	1	HZ,HZA,HZG HZG,PZ
58	25950-N3000....	RESISTER ASS'Y-instrument ('73)	1	ALL
59	25170-N3000....	**LAMP ASS'Y-illumination ('73)**	1	ALL
60	25172-N3000....	SOCKET ASS'Y-illumination lamp	1	ALL
61	26713-89900....	BULB 12V-34W	1	ALL
62	08310-41014....	SCREW-with lock washer	1	ALL

NOTE

●エレファント　スーパーPCV

耐摩耗性がすぐれているので、いつまでも良好なエンジン性能が維持されしかも燃費を節約できます。

エレファント
モーターオイル
日産純正

FIG. 214 NISSAN MOTOR CO., LTD.

WINDSHIELD WIPER

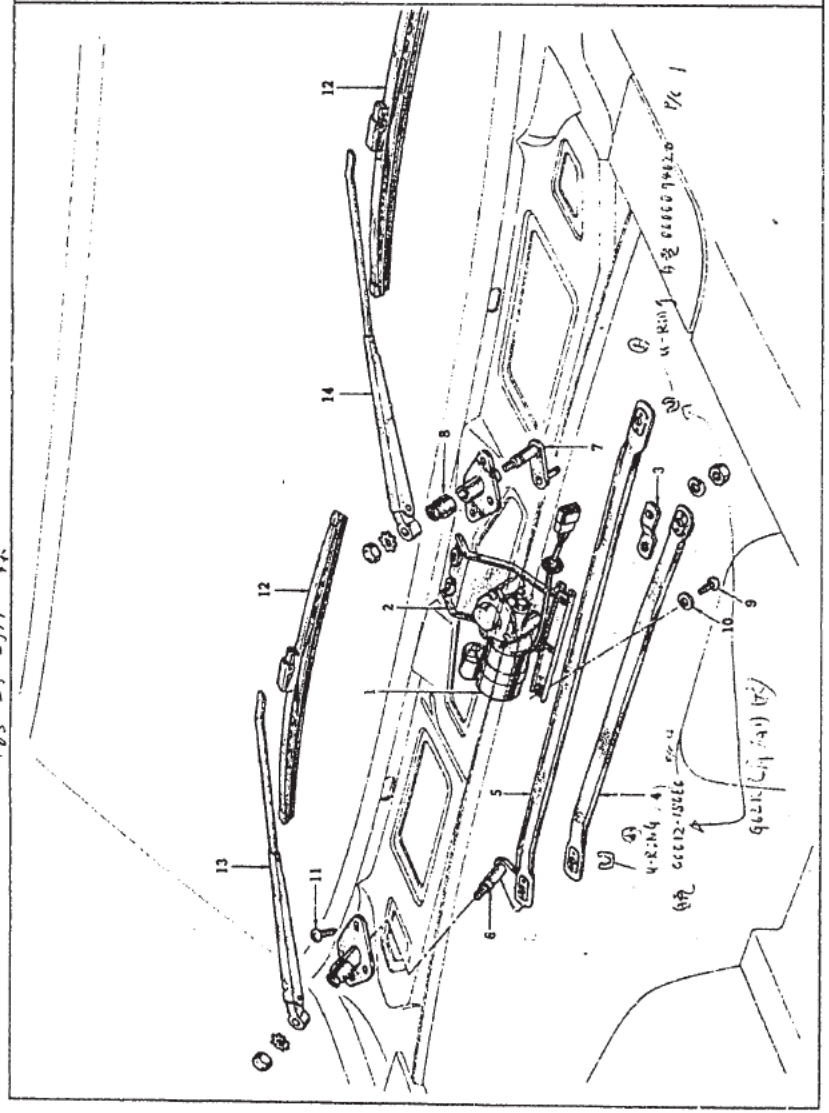

KEY No	PART NO.	PART NAME	QTY	MODELS
		WINDSHIELD WIPER		
	28800—E4100....	**DRIVE ASS'Y-windshield wiper**	1	L20, S20
	28800—E8200....	**DRIVE ASS'Y-windshield wiper**	1	ALL
	28800—E8201....	**DRIVE ASS'Y-windshield wiper (from '73 model)**	1	ALL
1	28810—E4100....	MOTOR ASS'Y-wiper	1	L20, S20
(1)	28810—E8200....	MOTOR ASS'Y-wiper	1	ALL
(1)	28810—E8201....	MOTOR ASS'Y-wiper	1	ALL
2	28835—E4100....	BRACKET ASS'Y-wiper motor	1	ALL
3	28840—E4100....	ARM ASS'Y-wiper motor	1	ALL
4	28860—E4100....	ROD ASS'Y-connecting No. 1	1	ALL
5	28865—E4100....	ROD ASS'Y-connecting No. 2	1	ALL
6	28870—E4100....	PIVOT ASS'Y-wiper No. 1	1	ALL
7	28880—E4100....	PIVOT ASS'Y-wiper No. 2	1	ALL
8	28890—E4100....	BOOT-pivot shaft	2	ALL
9	01431—00073....	SCREW-with lock washer	4	ALL
10	74340—12161....	WASHER-special	4	ALL
11	08360—51014....	SCREW	6	ALL
12	26370—E4100....	BLADE ASS'Y-wiper	2	L20, S20 HZS, HZSA
(12)	26370—E8700....	BLADE ASS'Y-wiper BLACK	2	HZ,HZA,HZG HZGA

1974. 3

FIG. 214 NISSAN MOTOR CO. LTD.

KEY No	PART NO	PART NAME	QTY	MODELS
13	26380-E4100....	ARM ASS'Y-wiper No. 1	1	L20, S20 HZS, HZSA
14	26385-E4100....	ARM ASS'Y-wiper No. 2	1	L20, S20 HZS, HZSA
(13)	26380-E8700....	ARM ASS'Y-wiper No. 1	1	HZ, HZA, HZG HZGA
(14)	26385-E8700....	ARM ASS'Y-wiper No. 2	1	HZ, HZA, HZG HZGA
	28836-E4100....	COVER-wiper motor	1	ALL

NOTE

●エレファント　スーパーPCV

スラッジやワニスの堆積を防止する能力はずばぬけておりエンジン内部をきれいに保ちます。低温スラッジでオイルの通路を閉鎖することもありません。

エレファント
モーターオイル
日産純正

FIG. 215 NISSAN MOTOR CO., LTD.

WINDOW WASHER

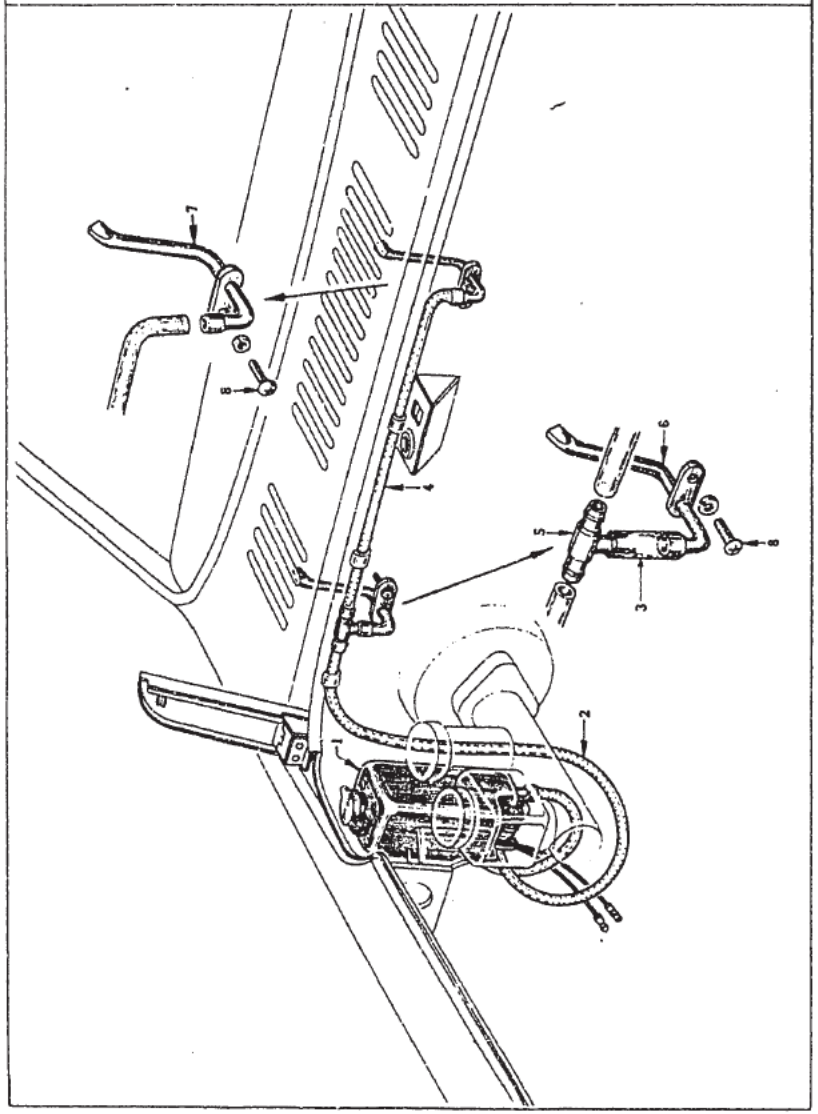

KEY No.	PART NO	PART NAME	QTY	MODELS
		WINDSHIELD WASHER		
	27400–E4100....	**WASHER KIT-windshield**	1	ALL (exc. PZR)
1	27400–89901....	TANK ASS'Y-washer	1	ALL (exc. PZR)
2	27460–89983....	TUBE-washer	1	ALL (exc. PZR)
3	27460–89904....	TUBE-washer	1	ALL (exc. PZR)
4	27460–89949....	TUBE-washer	1	ALL (exc. PZR)
5	27416–89900....	TEE-tube	1	ALL (exc. PZR)
6	27440–E4101....	NOZZLE ASS'Y-washer No. 1	1	ALL (exc. PZR)
7	27445–E4100....	NOZZLE ASS'Y-washer No. 2	1	ALL (exc. PZR)
8	08510–41012....	SCREW-tapping	2	ALL (exc. PZR)

1974. 3

FIG. 216 NISSAN MOTOR CO., LTD.

FRONT LAMP

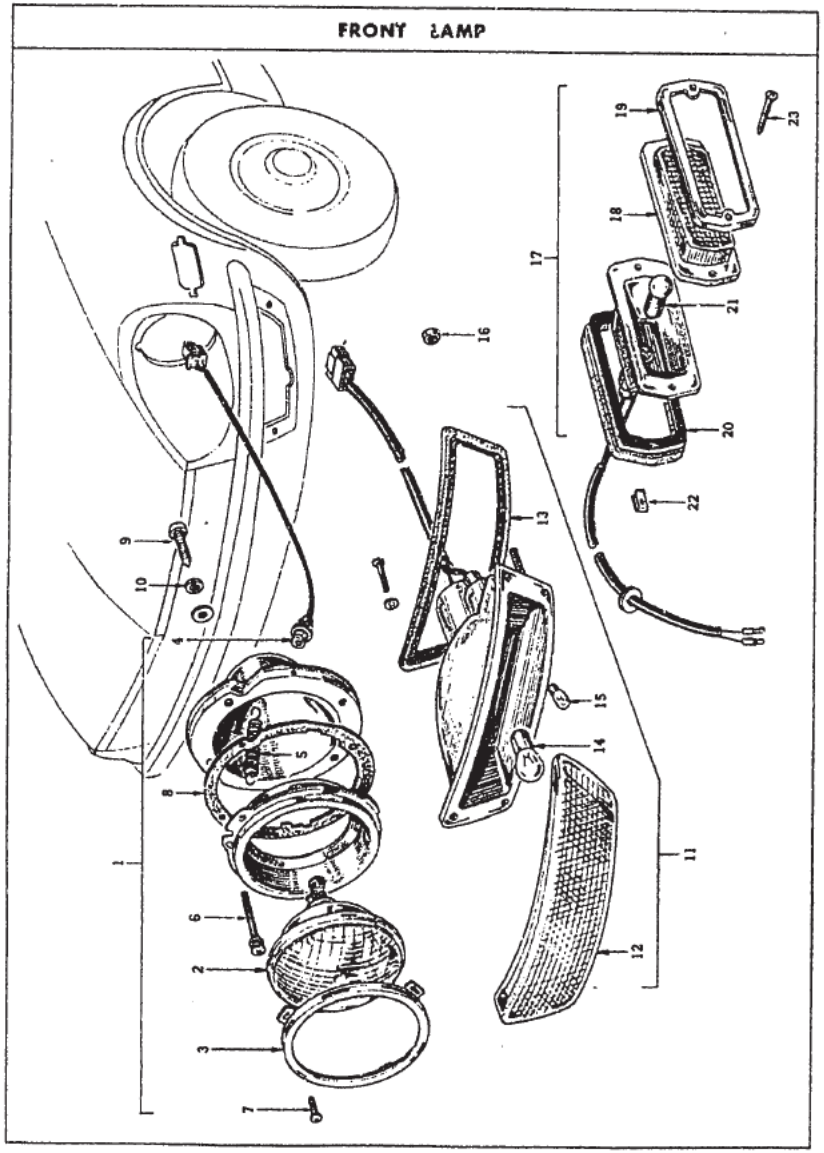

KEY No	PART NO	PART NAME	QTY	MODELS
		HEAD LAMP		
1 Ⓡ	26010–E4100....	**LAMP ASS'Y-head (R.H.)**	1	ALL
Ⓛ	26060–E4100....	**LAMP ASS'Y-head (L.H.)**	1	ALL
2	26705–89900....	UNIT-sealed beam	2	ALL
3	26017–04100....	RING-retaining, lamp unit	2	ALL
4	26025–E4100....	HOUSING ASS'Y-head lamp with cord	2	ALL
5	26024–01301....	SPRING-extension	2	ALL
6	26022–01301....	SCREW-adjusting	4	ALL
7	08310–40612....	SCREW	6	ALL
8	26027–E4100....	PACKING (R.H.)	1	ALL
	26077–E4100....	PACKING (L.H.)	1	ALL
9	08410–51609....	SCREW	8	ALL
10	08915–13510....	WASHER-lock	8	ALL
	08915–43510....	WASHER-plain	8	ALL
		PARKING & TURN SIGNAL LAMP		
Ⓡ	26120–E4100....	**LAMP ASS'Y-parking & turn signal (R.H.)**	1	ALL
11 Ⓛ	26125–E4100....	**LAMP ASS'Y-parking & turn signal (L.H.)**	1	ALL
	26121–E4100....	LENS-parking & turn signal (R.H.)	1	ALL

1974, 3

FIG. 216 NISSAN MOTOR CO., LTD.

KEY No.	PART NO	PART NAME	QTY	MODELS
12	26126–E4100....	LENS-parking & turn signal (L.H.)	1	ALL
	26123–E4100....	PACKING-lamp (R.H.)	1	ALL
13	26128–E4100....	PACKING-lamp (L.H.)	1	ALL
14	26717–89920....	BULB 12V-23W-7W	2	ALL
15	26261–89900....	BULB 12V-3W	2	ALL
16	01221–00023....	NUT	4	ALL

SIDE FLASHER LAMP

	26160–E4100....	LAMP ASS'Y-side flasher (R.H.)	1	ALL
17	26165–E4100....	LAMP ASS'Y-side flasher (L.H.)	1	ALL
	26160–N3000....	LAMP ASS'Y-side flasher (R.H.) (from '73 model)	1	ALL
	26165–N3000....	LAMP ASS'Y-side flasher (L.H.) (from '73 model)	1	ALL
18	26161–E4100....	LENS-side flasher lamp	2	ALL
19	26182–A5500....	RIM-side flasher lamp	2	ALL
	26163–E4100....	PACKING-side flasher lamp (R.H.)	1	ALL
20	26168–E4100....	PACKING-side flasher lamp (L.H.)	1	ALL
21	26715–89902....	BULB 12V-8W	2	ALL
22	08963–10410....	NUT-spring	4	ALL
23	08410–42590....	SCREW	4	ALL

NOTE

●エレファント　スーパーデラックス

ドロドロした低温スラッジがオイルの通路をふさぐ心配がないので信号待ちの多い市街地を走る場合でも快調です。

エレファント
モーターオイル

日産純正

1974, 3

FIG. 217 NISSAN MOTOR CO. LTD

FOG & INSPECTION LAMP

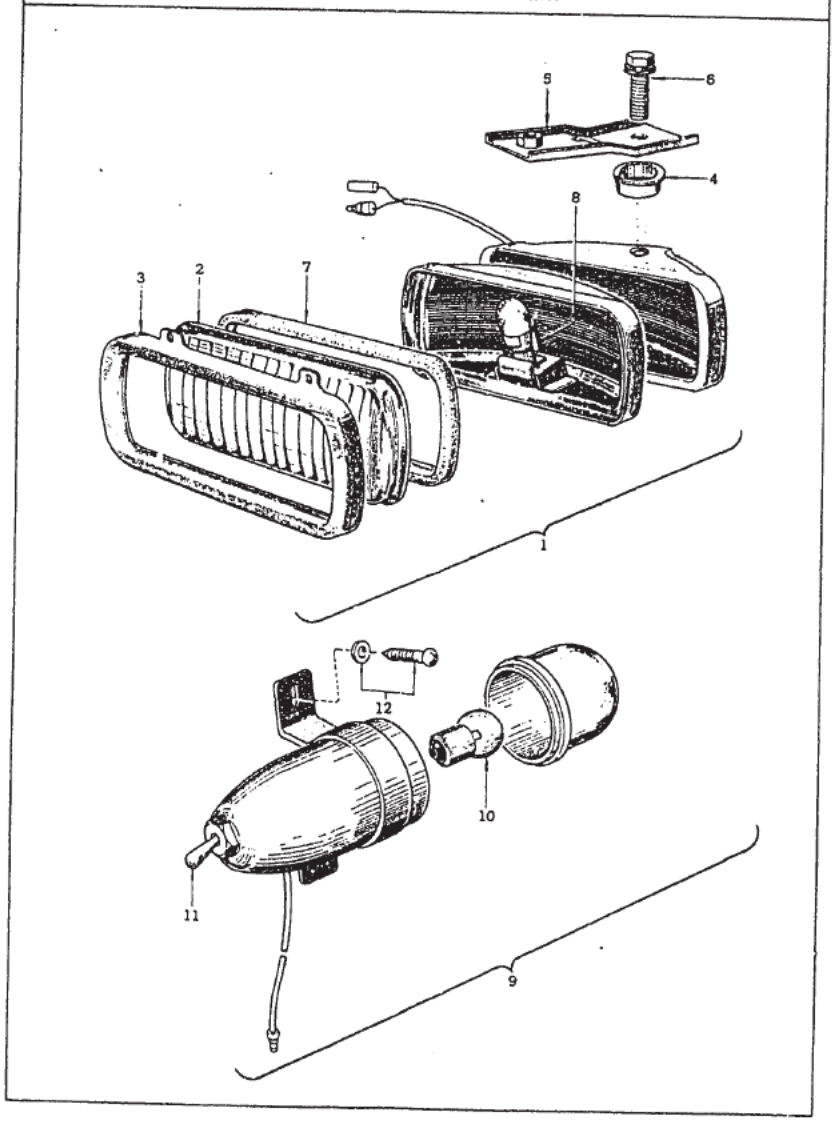

KEY No	PART NO	PART NAME	QTY	MODELS
		FOG LAMP		
	ⓐ 26150–E4100....	**FOG LAMP ASS'Y (R.H.)**	1	(op.) ALL
1	ⓐ 26155–E4100....	**FOG LAMP ASS'Y (L.H.)**	1	(op.) ALL
2	26151–28500....	LENS-fog lamp	2	(op.) ALL
3	26123–28500....	RIM-fog lamp	2	(op.) ALL
4	26154–E4100....	SPACER-fog lamp	2	(op.) ALL
	26153–E4100....	BRACKET-fog lamp (R.H.)	1	(op.) ALL
5	26158–E4100....	BRACKET-fog lamp (L.H.)	1	(op.) ALL
6	08110–82525....	BOLT-with lock & plain washer	2	(op.) ALL
7	26153–28500....	PACKING-fog lamp	2	(op.) ALL
8	26720–28500....	BULB 12V-35W	2	(op.) ALL
		INSPECTION LAMP		
9	ⓐ 26740–89904....	**LAMP ASS'Y-inspection**	1	Z-dx, (op.) Z-std.
10	26232–30000....	BULB 12V-8W	1	Z-dx, (op.) Z-std.
11	26745–89900....	SWITCH ASS'Y-inspection lamp	1	Z-dx, (op.) Z-std.
12	08510–51623....	SCREW-tapping	2	Z-dx, (op.) Z-std.

FIG. 218 NISSAN MOTOR CO., LTD.

ROOM, MAP, STEP LAMP & FUSEE HOLDER

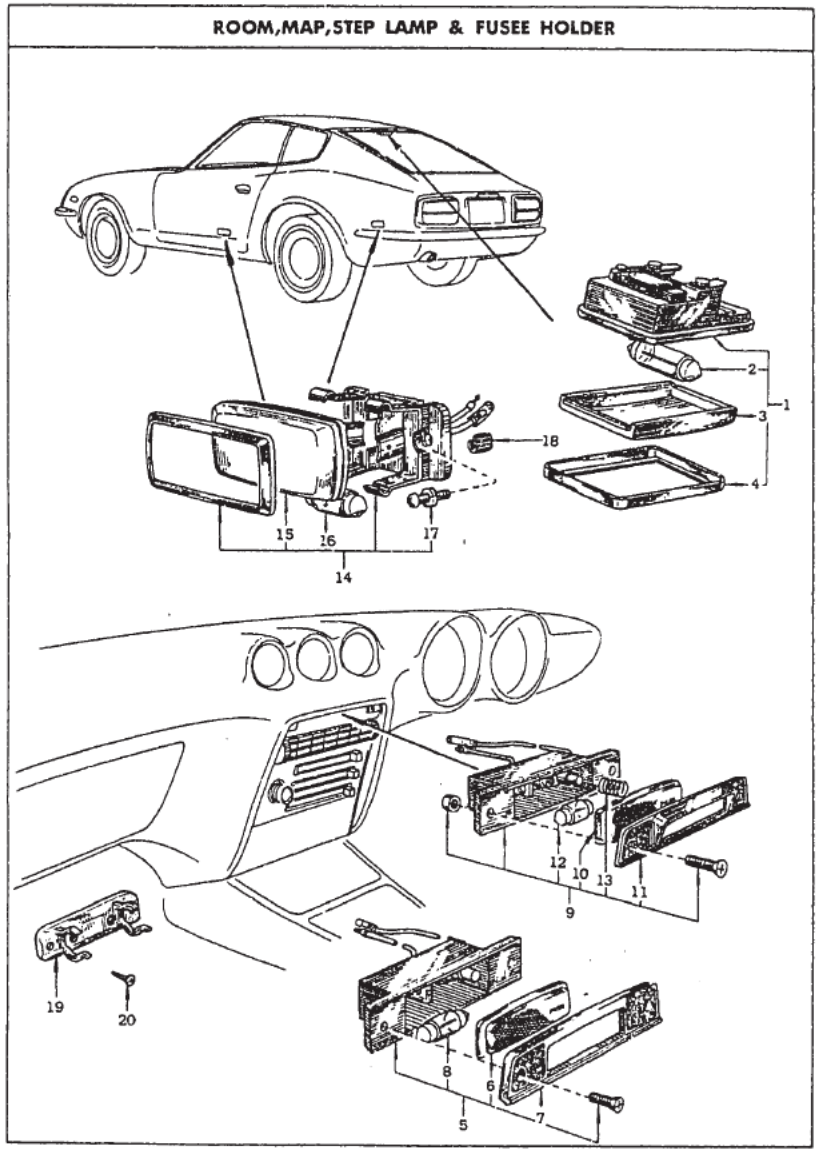

KEY No	PART NO	PART NAME	QTY	MODELS
		ROOM LAMP		
	ⓐ 26410–E4100....	**LAMP ASS'Y-room**	1	L20, PZ ┐ ○
1	ⓐ 26410–E4101....	**LAMP ASS'Y-room**	1	ALL (exc. PZR) ┘
2	26736–89901....	BULB 12V-10W	1	ALL
3	26411–E4100....	COVER-lamp	1	ALL
4	26412–E4100....	RIM-lamp	1	ALL
		MAP LAMP		
5	ⓐⓑ 26430–E4100....	**LAMP ASS'Y-map**	1	L20, PZ ┐
6	26432–E4100....	LENS-map lamp	1	L20, PZ
7	26433–E4100....	RIM-map lamp	1	L20, PZ
8	26734–89900....	BULB 12V-5W	1	L20, PZ ┘
9	ⓐ 26430–E8200....	**LAMP ASS'Y-map (from C/#S30-04556, PS30-00402)**	1	ALL ┐ △
10	26432–E4100....	LENS-map lamp	1	ALL
11	26433–E8200....	RIM-map lamp	1	ALL
12	26734–89900....	BULB 12V-5W	1	ALL
13	26435–E8200....	SPRING-return	1	ALL ┘

1974, 3

FIG. 218 NISSAN MOTOR CO., LTD

KEY No.	PART NO.	PART NAME	QTY	MODELS
		STEP LAMP		
14	(重) 26420–E4100....	LAMP ASS'Y-step	2	(op.) ALL
15	26422–E4100....	LENS-step lamp with rim	1	(op.) ALL
16	26734–89900....	BULB 12V-5W	1	(op.) ALL
17	08363–61214....	SCREW-with lock washer	2	(op.) ALL
18	80848–E4100....	CLIP-lamp harness	1	(op.) ALL
		FUSEE HOLDER		
19	26895–89900....	HOLDER-fusee	1	ALL
20	08510–51612....	SCREW-tapping	2	ALL

NOTE

●エレファント　スーパーPCV

PCV装置によって発生しやすくなったサビや汚れを完全に抑制する高度の特性を備えた新時代のオイルです。

エレファント
モーターオイル

日産純正

1974, 3

B 4

FIG. 219 NISSAN MOTOR CO., LTD.

REAR LAMP

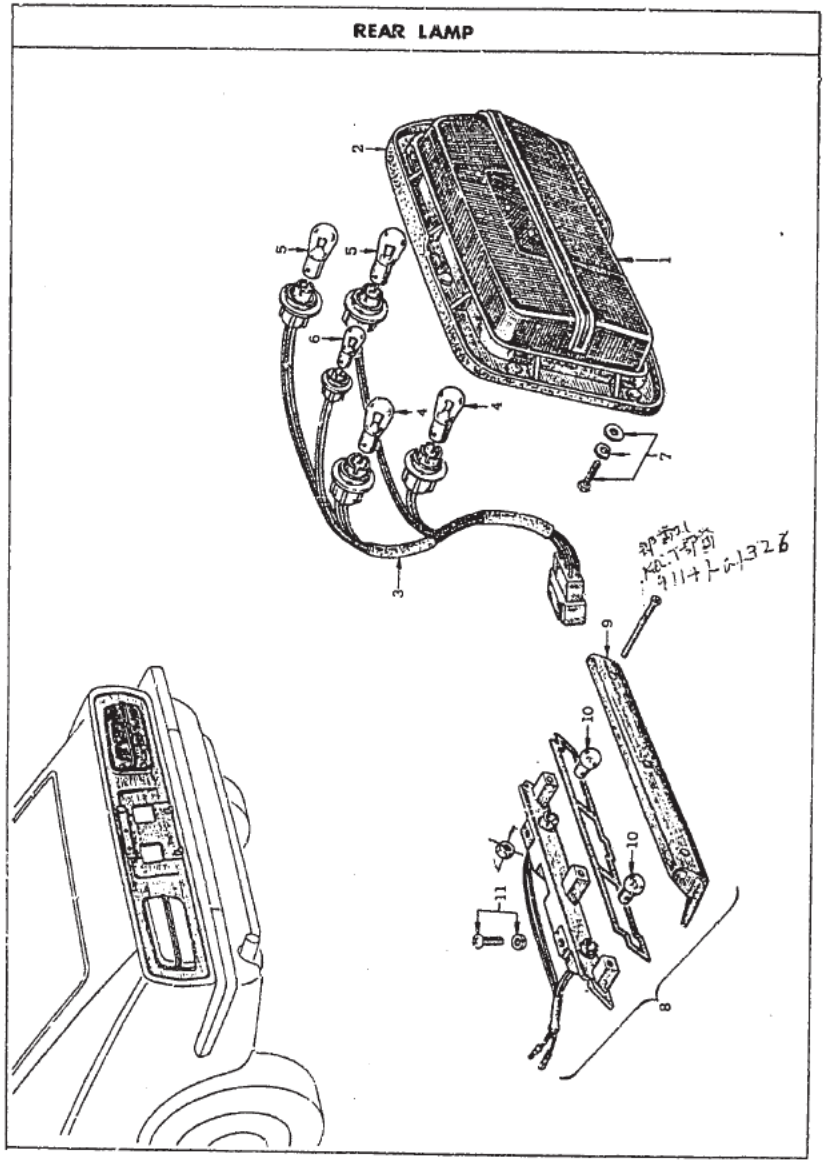

KEY No.	PART NO.	PART NAME	Q'TY	MODELS
		COMBINATION LAMP		
1	▣26550–E4100....	**LAMP ASS'Y-combination (R.H.)**	1	ALL
1	▣26555–E4100....	**LAMP ASS'Y-combination (L.H.)**	1	ALL
	26551–E4100....	BODY & LENS ASS'Y-lamp (R.H.)	1	ALL
	26556–E4100....	BODY & LENS ASS'Y-lamp (L.H.)	1	ALL
	26551–E4300....	BODY & LENS ASS'Y-lamp (R.H.)	1	ALL
	26556–E4300....	BODY & LENS ASS'Y-lamp (L.H.)	1	ALL
2	26552–E4100....	PACKING-lamp (R.H.)	1	ALL
2	26557–E4100....	PACKING-lamp (L.H.)	1	ALL
3	26553–E4100....	CORD ASS'Y-lamp	2	ALL
4	26717–89920....	BULB-12V-23W-7W	4	ALL
5	26717–89900....	BULB-12V-23W	4	ALL
6	26261–89900....	BULB-12V-3W	2	ALL
7	08310–51426....	SCREW-with lock & plain washer	16	ALL
		LICENCE LAMP		
8	▣26510–E4100....	**LAMP ASS'Y-licence**	1	ALL
9	26512–E4100....	COVER ASS'Y-lamp	1	ALL
10	26715–89901....	BULB-12V-7.5W	2	ALL

1974. 3

FIG. 219 NISSAN MOTOR CO. LTD

KEY No	PART NO	PART NAME	QTY	MODELS
11	08313-51626....	SCREW-with lock & plain washer	2	ALL

NOTE

●エレファント　スーパーPCV

スラッジやワニスの堆積を防止する能力はずばぬけておりエンジン内部をきれいに保ちます。低温スラッジでオイルの通路を閉鎖することもありません。

エレファント
モーターオイル
日産純正

FIG. 220A-1 NISSAN MOTOR CO., LTD.

AIR CONDITIONER (1)

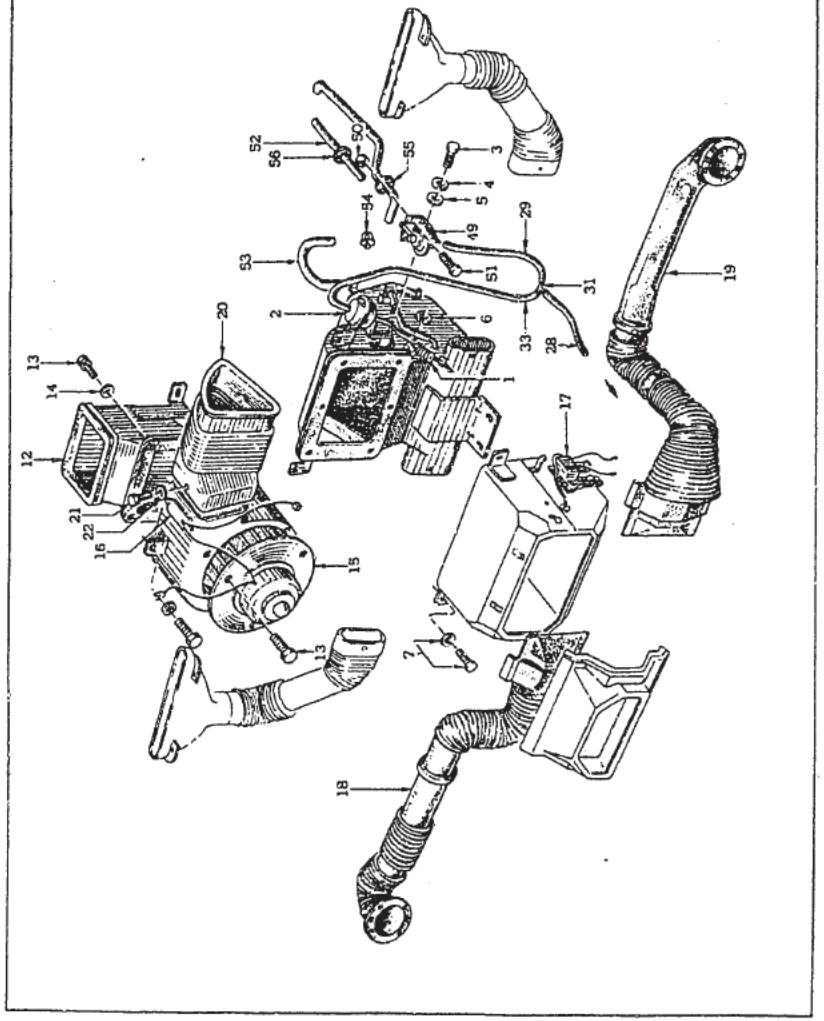

NISSAN MOTOR CO., LTD FIG. 220A-2

AIR CONDITIONER (2)

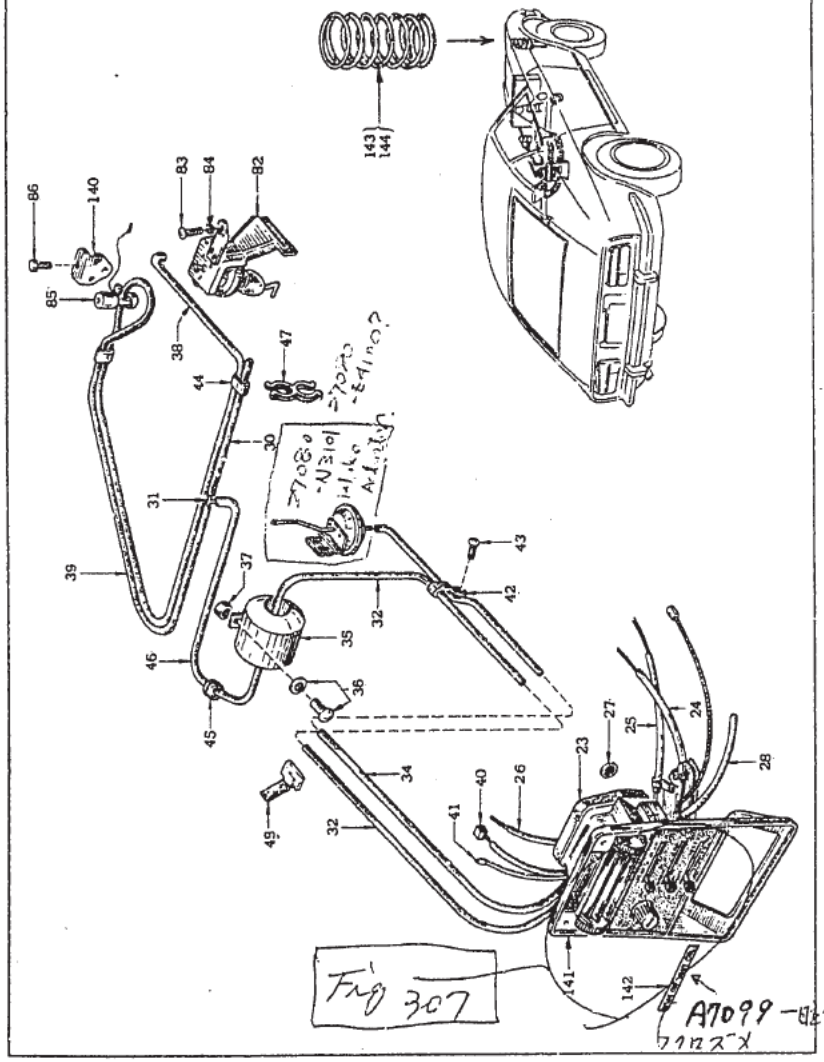

1974. 3

FIG. 220A-3 NISSAN MOTOR CO., LTD.

AIR CONDITIONER (3)

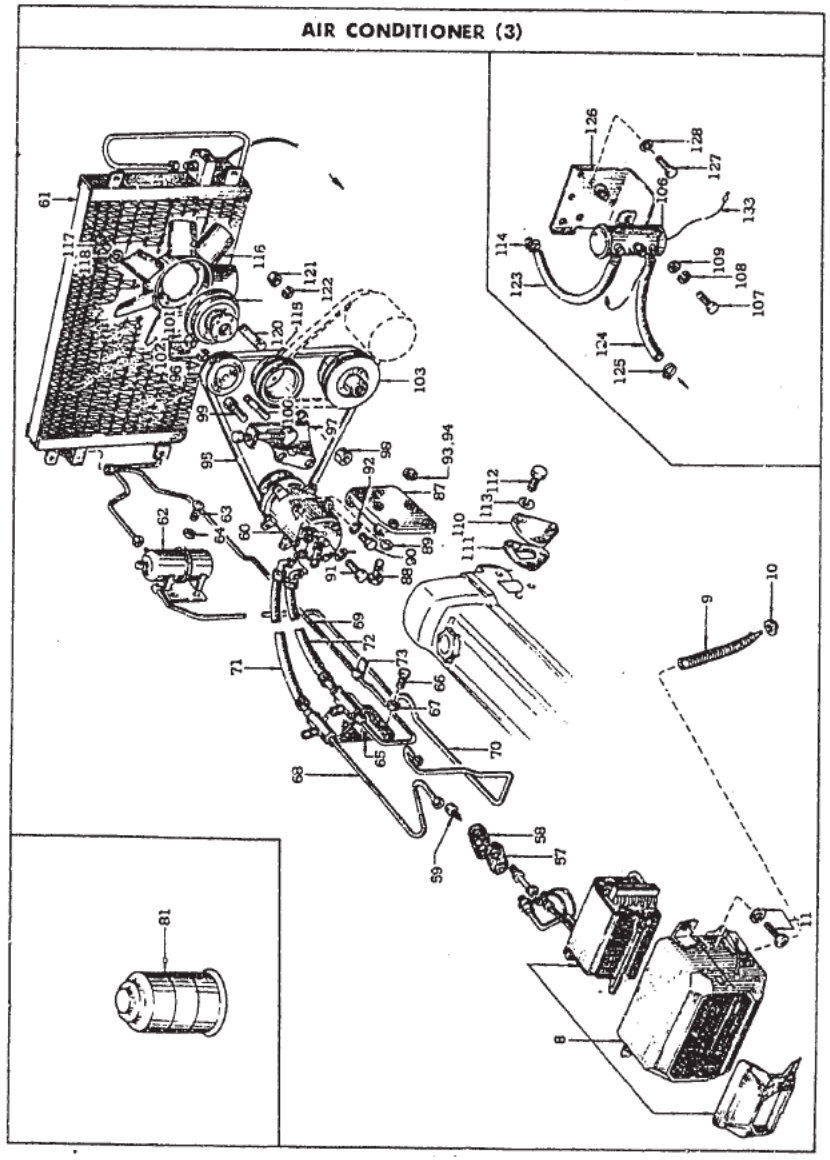

NISSAN MOTOR CO. LTD. FIG. 220-A

KEY No.	PART NO	PART NAME	QTY	MODELS

AIR CONDITIONER (Optional Parts) (up to '73-3)

	27001–E4125....	* AIR CONDITIONER KIT	1	(op.) L20, L24
1	27051–E4400....	SPRING-return	1	(op.) L20, L24
2	27081–E4100....	ACTUATOR ASS'Y-vacuum	1	(op.) L20, L24
3	08360–51212....	SCREW	2	(op.) L20, L24
4	08915–13510....	WASHER-lock	2	(op.) L20, L24
5	08915–43510....	WASHER-plain	2	(op.) L20, L24
6	27153–E4400....	RING-snap	1	(op.) L20, L24
7	08363–61226....	SCREW-with lock & plain washer	6	(op.) L20, L24
8	27610–E8800....	UNIT ASS'Y-cooling	1	(op.) L20, L24
9	27619–E4400....	HOSE-drain	1	(op.) L20, L24
10	27687–65000....	GROMMET-hose	1	(op.) L20, L24
11	08363–61226....	SCREW-with lock & plain washer	2	(op.) L20, L24
12	27010–E4100....	DUCT COMP.-intake	1	(op.) L20, L24
13	08360–61214....	SCREW	3	(op.) L20, L24
14	08915–43610....	WASHER-plain	3	(op.) L20, L24
15	27070–E4100....	MOTOR & FAN ASS'Y	1	(op.) L20, L24
16	27077–E4400....	RESISTANCE ASS'Y	1	(op.) L20, L24
17	25230–65001....	RELAY ASS'Y	1	(op.) L20, L24

1974, 3

FIG. 220-A NISSAN MOTOR CO. LTD.

KEY No.	PART NO.	PART NAME	QTY	MODELS
18	27665–E4101....	DUCT ASS'Y-assist ventilator	1	(op.) L20, L24
19	27665–E4102....	DUCT ASS'Y-drain ventilator	1	(op.) L20, L24
20	27670–E4401....	DUCT-center cooler	1	(op.) L20, L24
21	08360–51012....	SCREW	2	(op.) L20, L24
22	08915–43510....	WASHER-plain	2	(op.) L20, L24
23	27030–E4401....	CONTROL ASS'Y-air conditioner	1	(op.) L20, L24
24	27144–E4402....	CABLE ASS'Y-control "Warm-Cool"	1	(op.) L20, L24
25	27145–E4402....	CABLE ASS'Y-control "Off-Heat"	1	(op.) L20, L24
26	27146–E4402....	CABLE ASS'Y-control "Deff-Room"	1	(op.) L20, L24
27	27154–E4401....	NUT-push	2	(op.) L20, L24
28	27087–E4400....	HOSE-vacuum (100mm)	1	(op.) L20, L24
29	27082–E4400....	HOSE-vacuum (500mm)	1	(op.) L20, L24
30	27084–E4400....	HOSE-vacuum (700mm)	1	(op.) L20, L24
31	27083–E4400....	CONNECTOR-3 way	2	(op.) L20, L24
32	27082–E4404....	HOSE-vacuum (900mm)	1	(op.) L20, L24
33	27082–E4405....	HOSE-vacuum (430mm)	1	(op.) L20, L24
34	27082–E4402....	HOSE-vacuum (980mm)	1	(op.) L20, L24
35	27085–E4401....	TANK ASS'Y-vacuum	1	(op.) L20, L24
36	08363–61226....	SCREW-with lock & plain washer	2	(op.) L20, L24
37	08911–10610....	NUT	2	(op.) L20, L24

KEY No.	PART NO.	PART NAME	QTY	MODELS
38	27082–E4403....	HOSE-vacuum (1450mm)	1	(op.) L20, L24
39	27086–E4400....	HOSE-vacuum (660mm)	1	(op.) L20, L24
40	27156–E4100....	WIRE ASS'Y-"B"	1	(op.) L20, L24
41	27155–E4400....	WIRE ASS'Y-"A"	1	(op.) L20, L24
42	27797–E4400....	CLAMP-vacuum hose	1	(op.) L20, L24
43	08310–40612....	SCREW	1	(op.) L20, L24
44	24220–89971....	CLIP	13	(op.) L20, L24
45	18453–E4100....	GROMMET-rubber	1	(op.) L20, L24
46	27082–E4401....	HOSE-vacuum (320mm)	1	(op.) L20, L24
47	22472–G0301....	CLIP	3	(op.) L20, L24
48	R0848–E4100....	CLIP	4	(op.) L20, L24
49	27090–E4400....	COCK ASS'Y-water	1	(op.) L20, L24
50	08911–10610....	NUT	2	(op.) L20, L24
51	08363–61226....	SCREW-with lock & plain washer	2	(op.) L20, L24
52	27182–E4401....	HOSE-water inlet	1	(op.) L20, L24
	27182–N3000....	HOSE-water inlet (from '72-8)	1	(op.) L20, L24
53	27183–E4400....	HOSE-water inlet	1	(op.) L20, L24
54	08723–12200....	CLAMP-hose	6	(op.) L20, L24
55	27243–26500....	GROMMET-rubber	1	(op.) L20, L24
56	27035–21002....	GROMMET	1	(op.) L20, L24

1974. 3

FIG. 220-A NISSAN MOTOR CO. LTD.

KEY No	PART NO	PART NAME	QTY	MODELS
57	27681–E0100....	GROMMET	1	(op.) L20, L24
58	27682–73000....	COVER	1	(op.) L20, L24
59	08510–51612....	SCREW	1	(op.) L20, L24
60	27630–A4601....	COMPRESSOR ASS'Y	1	(op.) L20, L24
61	27650–E4400....	CONDENSER ASS'Y	1	(op.) L20, L24
62	27640–E4402....	TANK ASS'Y-liquid	1	(op.) L20, L24
63	08360–61414....	SCREW	2	(op.) L20, L24
64	08915–43610....	WASHER-plain	2	(op.) L20, L24
65	27636–E4400....	JOINT ASS'Y-check	1	(op.) L20, L24
66	08360–61414....	SCREW	2	(op.) L20, L24
67	08915–43610....	WASHER-plain	2	(op.) L20, L24
68	27676–E4402....	PIPE ASS'Y-evaporator to check joint	1	(op.) L20, L24
69	27677–E4402....	PIPE ASS'Y-check joint to condenser	1	(op.) L20, L24
70	27679–E4401....	PIPE ASS'Y-condenser to liquid tank	1	(op.) L20, L24
71	27681–E4400....	HOSE-flexible high	1	(op.) L20, L24
72	27682–E4401....	HOSE-flexible low	1	(op.) L20, L24
73	27691–78500....	CLAMP-tube	1	(op.) L20, L24
74	27692–78500....	GROMMET-tube	1	(op.) L20, L24
75	08310–61212....	SCREW	1	(op.) L20, L24
76	27695–E4100....	PROTECTOR-clamp	1	(op.) L20, L24

NISSAN MOTOR CO. LTD FIG. 220-A

KEY No	PART NO	PART NAME	QTY	MODELS
77	08510–51012....	SCREW	1	(op.) L20, L24
78	24210–69920....	CLAMP	4	(op.) L20, L24
79	08510–51012....	SCREW	4	(op.) L20, L24
80	08915–13510....	WASHER-lock	4	(op.) L20, L24
81	27706–65000....	REFRIGERANT-cooler	1	(op.) L20, L24
82	27655–E4400....	ACTUATOR ASS'Y-fast idle	1	(op.) L20, L24
83	08360–61414....	SCREW	1	(op.) L20, L24
84	08915–43610....	WASHER-plain	1	(op.) L20, L24
85	27658–E4400....	VALVE ASS'Y-air	1	(op.) L20, L24
86	08310–51214....	SCREW	1	(op.) L20, L24
87	11910–P0300....	BRACKET-compressor	1	(op.) L20, L24
88	08131–03010....	BOLT	4	(op.) L20, L24
89	08915–14010....	WASHER-lock	4	(op.) L20, L24
90	08130–83010....	BOLT	2	(op.) L20, L24
91	11915–P0300....	BOLT-compressor	2	(op.) L20, L24
92	08915–13810....	WASHER-lock	4	(op.) L20, L24
93	11713–21000....	SHIM (0.3mm)	8	(op.) L20, L24
94	11713–21001....	SHIM (0.2mm)	8	(op.) L20, L24
95	11920–E0102....	BELT-compressor	1	(op.) L20, L24
96	11925–E3010....	PULLEY ASS'Y-idle	1	(op.) L20, L24

1974. 3

FIG. 220-A NISSAN MOTOR CO., LTD

KEY No	PART NO.	PART NAME	QTY	MODELS
97	11935–E3010....	BRACKET-idle pulley	1	(op.) L20, L24
98	11938–E3000....	SPACER-idle pulley	1	(op.) L20, L24
99	11916–21001....	BOLT	1	(op.) L20, L24
100	08223–82810....	STUD	2	(op.) L20, L24
101	08911–20810....	NUT	2	(op.) L20, L24
102	08915–13810....	WASHER-lock	3	(op.) L20, L24
103	12303–E4102....	PULLEY ASS'Y-water pump	1	(op.) L20, L24
104	16361–E4100....	SHAFT-auxiliary throttle	1	(op.) L20, L24
105	16440–E4121....	HOSE-fuel strainer to pump	1	(op.) L20, L24
106	17020–E4100....	PUMP ASS'Y-fuel	1	(op.) L20, L24
107	08360–63010....	SCREW	2	(op.) L20, L24
108	08915–13610....	WASHER-lock	2	(op.) L20, L24
109	08915–53610....	WASHER-plain	2	(op.) L20, L24
110	16420–E3020....	COVER-fuel pump plate	1	(op.) L20, L24
111	17099–E3012....	GASKET-fuel pump	1	(op.) L20, L24
112	08120–82010....	BOLT	3	(op.) L20, L24
113	08915–13810....	WASHER-lock	3	(op.) L20, L24
114	17106–E3000....	CLAMP-fuel hose	1	(op.) L20, L24
115	21051–E3200....	PULLEY-fuel pump	1	(op.) L20, L24
116	21060–E8700....	FAN-cooling	1	(op.) L20, L24

KEY No.	PART NO.	PART NAME	QTY	MODELS
117	08130–61610....	BOLT	4	(op.) L20, L24
118	08915–13110....	WASHER-lock	4	(op.) L20, L24
119	21082-(P0200)...	COUPLING ASS'Y-fan	1	(op.) L20, L24
120	08226–61400....	STUD	4	(op.) L20, L24
121	08911–10610....	NUT	4	(op.) L20, L24
122	08915–13610....	WASHER-lock	4	(op.) L20, L24
123	08740–22030....	HOSE-fuel	1	(op.) L20, L24
124	08740–30030....	HOSE-fuel	1	(op.) L20, L24
125	08723–11600....	CLAMP-hose	4	(op.) L20, L24
126	17033–E4200....	BRACKET-fuel pump	1	(op.) L20, L24
127	08110–61010....	BOLT	3	(op.) L20, L24
128	08915–13610....	WASHER-lock	3	(op.) L20, L24
129	21475–E4102....	SHROUD ASS'Y-radiator	1	(op.) L20, L24
130	08410–61212....	SCREW	4	(op.) L20, L24
131	08915–43610....	WASHER-plain	4	(op.) L20, L24
132	08915–13610....	WASHER-lock	4	(op.) L20, L24
133	24021–E8200....	HARNESS-fuel pump	1	(op.) L20, L24
134	24251–E8700....	CLIP	1	(op.) L20, L24
135	24025–E4100....	COVER-wiring	1	(op.) L20, L24
136	24029–E4600....	ADAPTER	1	(op.) L20, L24

FIG. **220-A** NISSAN MOTOR CO., LTD.

KEY No	PART NO.	PART NAME	QTY	MODELS
137	26315–E7200....	BRACKET-electric horn	2	(op.) L20, L24
138	08110–81462....	BOLT	4	(op.) L20, L24
139	47475–E4401....	CONNECTOR	1	(op.) L20, L24
140	64127–E4100....	BRACKET ASS'Y-air valve	2	(op.) L20, L24
141	68830-E8201	Finisher inst (方向指示)		
~~141~~	68842–E4100....	LABEL-air control	1	(op.) L20, L24
142	68844–E4100....	LABEL-temperature control	1	(op.) L20, L24
	68845-E4100	LABEL-lif control		
143	54010–E4105....	SPRING-front (R.H.)	1	(op.) L20, L24
144	54010–E4103....	SPRING-front (L.H.)	1	(op.) L20, L24
145	●24024–E8200....	HARNESS-accelerator	1	Z-std
146	●25230–E4100....	RELAY ASS'Y	1	Z-std
	△21400–E4502....	RADIATOR ASS'Y	1	A-all

●印部品は熱線リヤーウインドガラス未装着車にキット部品とは別に追加使用して下さい。
△印部品はオートマチック トランスミッション車のみにキット部品とは別に追加使用して下さい。

NOTE

●エレファント　スーパーデラックス

冬期又は寒冷地にてノロノロ運転で発生しがちな錆や腐食からエンジンを守ります。

エレファント
モーターオイル

日産純正

1974, 3

FIG. 220B-1 NISSAN MOTOR CO., LTD.

AIR CONDITIONER

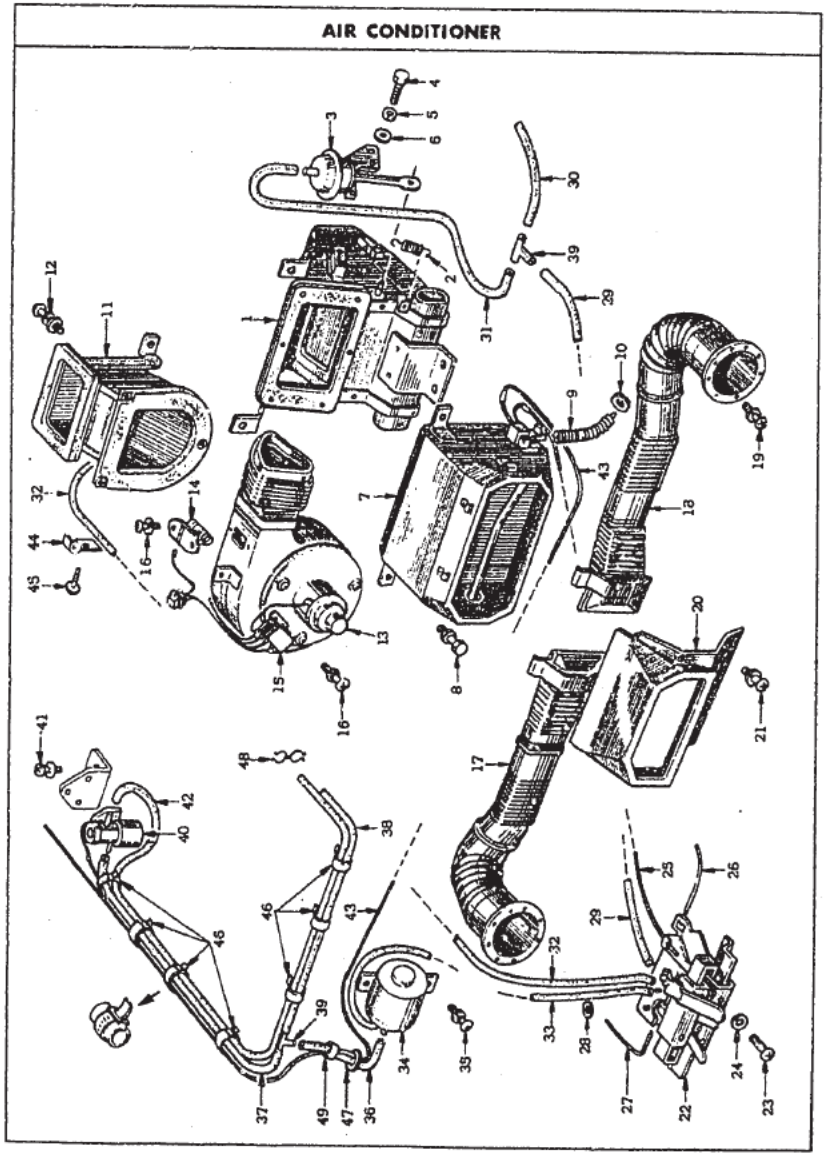

NISSAN MOTOR CO., LTD FIG. 220B-2

AIR CONDITIONER

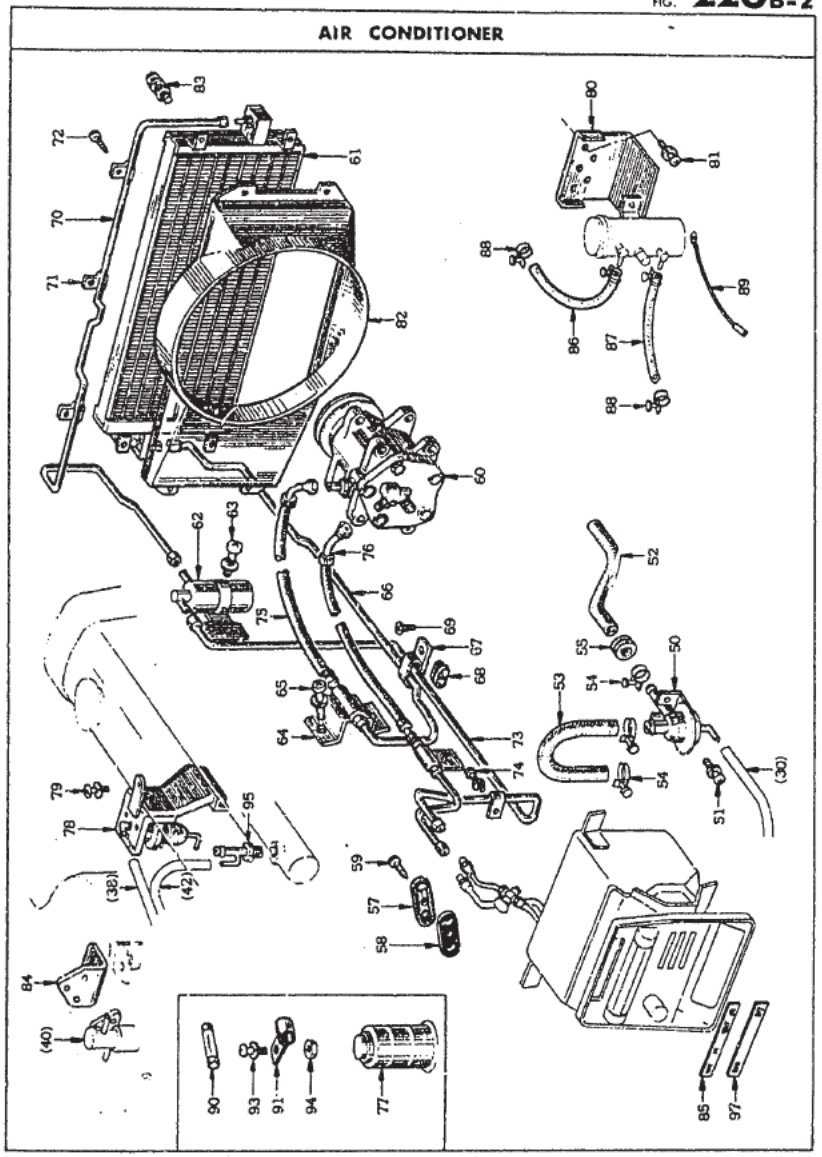

1974, 3

FIG. 220B-3 NISSAN MOTOR CO. LTD

AIR CONDITIONER

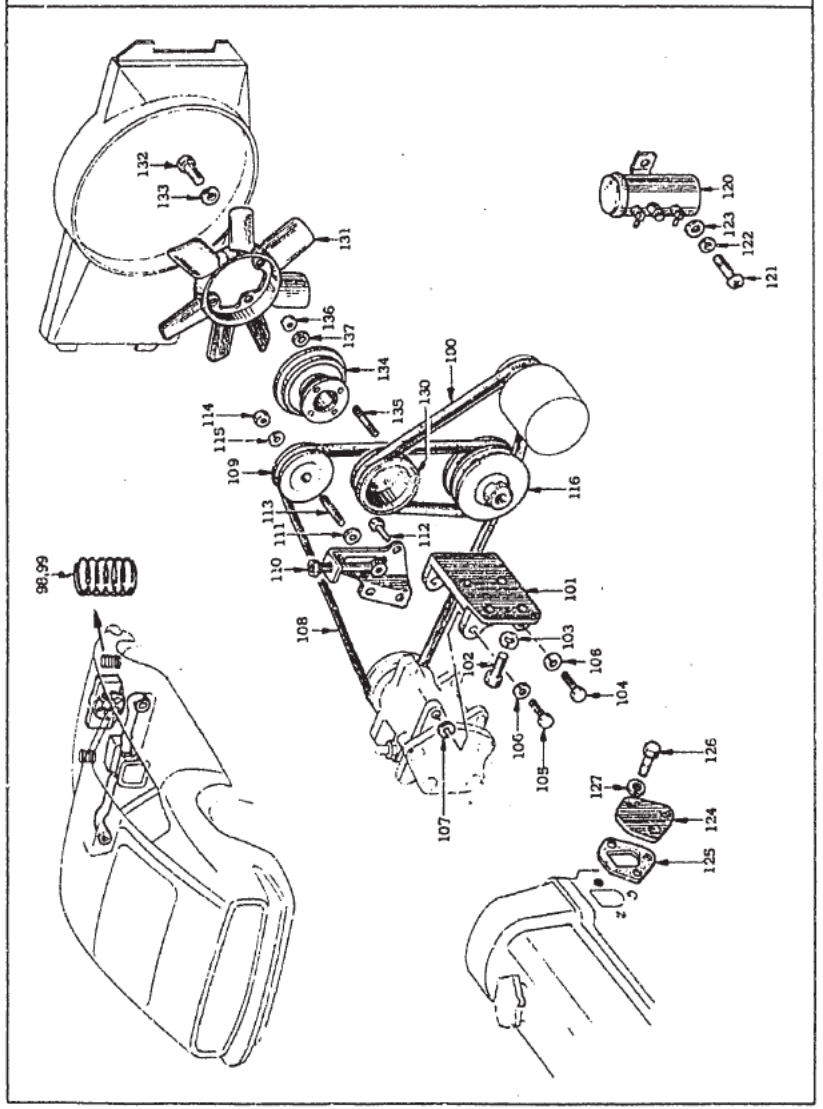

NISSAN MOTOR CO. LTD. FIG. 220-B

KEY No.	PART NO.	PART NAME	QTY	MODELS
		AIR CONDITIONER (Optional Parts) (EVAPO 装置付, from '73-4)		
1	27110–E8700....	HEATING UNIT ASS'Y	1	(op.) L20, L24
2	27051–E4400....	SPRING-return	1	(op.) L20, L24
3	27081–E4100....	ACTUATOR ASS'Y-vacuum	1	(op.) L20, L24
4	08360–51212....	SCREW	2	(op.) L20, L24
5	08915–13510....	WASHER-lock	2	(op.) L20, L24
6	08915–43510....	WASHER-plain	2	(op.) L20, L24
7	27610–E8800....	COOLING UNIT ASS'Y	1	(op.) L20, L24
	脱部参 A-6916.	EVAPO.		
8	08363–61226....	SCREW-with lock & plain washer	4	(op.) L20, L24
9	27619–E4400....	HOSE-drain	1	(op.) L20, L24
10	27687–65000....	GROMMET-hose drain	1	(op.) L20, L24
11	27010–E4100....	DUCT COMP.-intake	1	(op.) L20, L24
12	08363–61226....	SCREW-with lock & plain washer	3	(op.) L20, L24
13	27070–E4100....	MOTOR & FAN ASS'Y	1	(op.) L20, L24
14	27077–E4400....	RESISTANCE ASS'Y	1	(op.) L20, L24
15	25230–65001....	RELAY ASS'Y	1	(op.) L20, L24
16	08363–61626....	SCREW-with lock & plain washer	4	(op.) L20, L24
17	27665–E4101....	DUCT ASS'Y-assist vent	1	(op.) L20, L24
18	27665–E4102....	DUCT ASS'Y-driver vent	1	(op.) L20, L24

1974, 3

FIG. 220-B NISSAN MOTOR CO. LTD.

KEY No.	PART NO.	PART NAME	QTY	MODELS
19	08363-61626....	SCREW-with lock & plain washer	6	(op.) L20, L24
20	27670-E4401....	DUCT-center cooler	1	(op.) L20, L24
21	08313-51226....	SCREW-with lock & plain washer	2	(op.) L20, L24
22	27030-E4401....	CONTROL ASS'Y-air conditioner	1	(op.) L20, L24
23	08310-40612....	SCREW	4	(op.) L20, L24
24	08915-13410....	WASHER-lock	4	(op.) L20, L24
25	27144-E4402....	CABLE ASS'Y-control	1	(op.) L20, L24
26	27145-E4402....	CABLE ASS'Y-control	1	(op.) L20, L24
27	27146-E4402....	CABLE ASS'Y-control	1	(op.) L20, L24
28	27154-E4401....	NUT-push	2	(op.) L20, L24
29	27087-E4400....	HOSE-vacuum L=100	1	(op.) L20, L24
30	27082-E4400....	HOSE-vacuum L=500	1	(op.) L20, L24
31	27082-E4405....	HOSE-vacuum L=430	1	(op.) L20, L24
32	27082-E4402....	HOSE-vacuum L=980	1	(op.) L20, L24
33	27082-E4404....	HOSE-vacuum L=900	1	(op.) L20, L24
34	27085-E4401....	TANK ASS'Y-vacuum	1	(op.) L20, L24
35	08363-61226....	SCREW-with lock & plain washer	2	(op.) L20, L24
36	27082-E4401....	HOSE-vacuum L=320	2	(op.) L20, L24
37	27086-E4400....	HOSE-vacuum L=660	1	(op.) L20, L24
38	27084-E4400....	HOSE-vacuum L=700	1	(op.) L20, L24

NISSAN MOTOR CO. LTD. FIG. 220-B

KEY No.	PART NO.	PART NAME	QTY	MODELS
39	27083-E4400....	CONNECTOR-3 way	2	(op.) L20, L24
40	27658-E4400....	VALVE ASS'Y-air magnet	1	(op.) L20, L24
41	08313-51226....	SCREW-with lock & plain washer	1	(op.) L20, L24
42	27082-E4403....	HOSE-vacuum L=1450	1	(op.) L20, L24
43	27156-E4100....	WIRE ASS'Y-B	1	(op.) L20, L24
44	27797-E4400....	CLAMP-vacuum hose	1	(op.) L20, L24
45	08310-40610....	SCREW	1	(op.) L20, L24
46	24220-89971....	CLIP	13	(op.) L20, L24
47	18453-E4100....	GROMMET-rubber	1	(op.) L20, L24
48	22472-G0301....	CLIP	3	(op.) L20, L24
49	80848-E4100....	CLIP	4	(op.) L20, L24
50	27090-E4400....	COCK ASS'Y-water	1	(op.) L20, L24
51	08363-61614....	SCREW-with lock washer	2	(op.) L20, L24
52	27182-N3000....	HOSE-water inlet	1	(op.) L20, L24
53	27183-E4400....	HOSE-water inlet	1	(op.) L20, L24
54	08723-12200....	CLAMP-hose	4	(op.) L20, L24
55	27035-21002....	GROMMET-hose inlet	1	(op.) L20, L24
56	27681-E0100....	GROMMET	1	(op.) L20, L24
57	27682-73000....	COVER-pipe	1	(op.) L20, L24
58	27618-73400....	GROMMET-pipe	1	(op.) L20, L24

FIG. 220-B NISSAN MOTOR CO. LTD.

KEY No.	PART NO	PART NAME	QTY	MODELS
59	08510–51612....	SCREW	1	(op.) L20, L24
60	27630–S0100....	COMPRESSOR ASS'Y	1	(op.) L20, L24
61	27650–E4400....	CONDENSER ASS'Y	1	(op.) L20, L24
62	27640–E4402....	TANK ASS'Y-liquid	1	(op.) L20, L24
63	08363–61226....	SCREW-with lock & plain washer	2	(op.) L20, L24
64	27636–N3000....	CONNECTOR ASS'Y-air compressor	1	(op.) L20, L24
65	08360–51426....	SCREW-with lock & plain washer	2	(op.) L20, L24
66	27677–N3000....	TUBE ASS'Y-air compressor to condenser	1	(op.) L20, L24
67	27695–E4100....	CLAMP-tube	1	(op.) L20, L24
68	27696–E4100....	PROTECTOR-clamp	1	(op.) L20, L24
69	08310–61212....	SCREW-tapping M6	1	(op.) L20, L24
70	27678–N3000....	TUBE ASS'Y	1	(op.) L20, L24
71	27154–E4196....	CLAMP	3	(op.) L20, L24
72	08510–51012....	SCREW-tapping	3	(op.) L20, L24
73	27679–N3050....	TUBE ASS'Y	1	(op.) L20, L24
74	08363–81226....	SCREW-with lock & plain washer	1	(op.) L20, L24
75	27681–N3000....	HOSE-air compressor high	1	(op.) L20, L24
76	27682–N3001....	HOSE-air compressor lower	1	(op.) L20, L24
77	27706–65000....	REFRIGERANT-cooler	4	(op.) L20, L24
78	27655–E4400....	ACTUATOR ASS'Y-fast idle	1	(op.) L20, L24

NISSAN MOTOR CO. LTD. FIG. 220-B

KEY No	PART NO	PART NAME	QTY	MODELS
79	08360–61226....	SCREW-with lock & plain washer	1	(op.) L20, L24
80	17033–E4200....	BRACKET-fuel pump	1	(op.) L20, L24
81	08363–61214....	SCREW-with lock washer	3	(op.) L20, L24
82	21475–E4102....	SHROUD ASS'Y-radiator	1	(op.) L20, L24
83	08363–61226....	SCREW-with lock & plain washer	4	(op.) L20, L24
84	64127–E4100....	BRACKET ASS'Y-air valve	1	(op.) L20, L24
85	68842–E4100....	LABEL-air control	1	(op.) L20, L24
86	08740–22030....	HOSE-fuel	1	(op.) L20, L24
87	08740–30030....	HOSE-fuel	1	(op.) L20, L24
88	08723–11600....	CLAMP-hose	4	(op.) L20, L24
89	24021–E8200....	HARNESS-fuel pump	1	(op.) L20, L24
90	25462–89901....	FUSE 20A	1	(op.) L20, L24
91	99604–H1400....	CLIP-fuel pump harness	1	(op.) L20, L24
92	27984–E4100....	CONDENSER-noise	1	(op.) L20, L24
93	08313–51226....	BOLT-with lock & plain washer	1	(op.) L20, L24
94	08911–10510....	NUT	1	(op.) L20, L24
95	47475–E4401....	CONNECTOR	1	(op.) L20, L24
96	08914–20600....	NUT-weld	5	(op.) L20, L24
97	68844–E4100....	LABEL-temp. control	1	(op.) L20, L24
98	54010–E4105....	SPRING-front (R.H.)	1	(op.) L20, L24

1974. 3

FIG. 220-B NISSAN MOTOR CO., LTD.

KEY No.	PART NO	PART NAME	QTY	MODELS
99	54010–E4103....	SPRING-front (L.H.)	1	(op.) L20, L24
100	11720–P0305....	BELT-fan	1	(op.) L20, L24
101	11910–P0300....	BRACKET	1	(op.) L20, L24
102	08131–03010....	BOLT-hex M10	4	(op.) L20, L24
103	08915–14010....	WASHER-lock	4	(op.) L20, L24
104	08130–38010....	BOLT-hex M8	2	(op.) L20, L24
105	11915–P0300....	BOLT-compressor	2	(op.) L20, L24
106	08915–13810....	WASHER-lock	4	(op.) L20, L24
107	11713–21000....	SHIM-alternator T=0.3	8	(op.) L20, L24
	11713–21001....	SHIM-alternator T=0.2	8	(op.) L20, L24
108	11920–E0102....	BELT-compressor	1	(op.) L20, L24
109	11925–E3010....	PULLEY ASS'Y-idler comp.	1	(op.) L20, L24
110	11935–E3010....	BRACKET-pulley idler	1	(op.) L20, L24
111	11938–E3000....	SPACER-idler bracket	1	(op.) L20, L24
112	11916–21001....	BOLT-hex M8	1	(op.) L20, L24
113	08223–82810....	STUD M8	2	(op.) L20, L24
114	08911–20810....	NUT-hex M8	2	(op.) L20, L24
115	08915–13810....	WASHER-lock	3	(op.) L20, L24
116	12303–N3311....	PULLEY ASS'Y-with dumper	1	(op.) L20, L24
117	13502–P0301....	INDICATION-timing	1	(op.) L20, L24

NISSAN MOTOR CO., LTD. FIG. 220-B

KEY No.	PART NO	PART NAME	QTY	MODELS
118	16361–E4100....	SHAFT-aux throttle	1	(op.) L20, L24
119	16440–E4121....	HOSE ASS'Y-fuel	1	(op.) L20, L24
120	17020–E4100....	PUMP ASS'Y-fuel electric	1	(op.) L20, L24
121	08360–63010....	SCREW M6	2	(op.) L20, L24
122	08915–13610....	WASHER-lock	2	(op.) L20, L24
123	08915–53610....	WASHER-plain	2	(op.) L20, L24
124	16420–E3020....	COVER-plate fuel pump	1	(op.) L20, L24
125	17099–E3012....	GASKET-fuel pump	1	(op.) L20, L24
126	08120–82010....	BOLT-hex M8	3	(op.) L20, L24
127	08915–13810....	WASHER-lock M8	3	(op.) L20, L24
128	17520–E4102....	TUBE ASS'Y-fuel	1	(op.) L20, L24
129	17106–E3000....	CLAMP-fuel hose	1	(op.) L20, L24
130	21051–E3201....	PULLEY-fan & water pump	1	(op.) L20, L24
131	21060–E8700....	FAN-cooling	1	(op.) L20, L24
132	08130–61610....	BOLT-hex M6	4	(op.) L20, L24
133	08915–13610....	WASHER-lock	4	(op.) L20, L24
134	21082–P0200....	COUPLING-fan	1	(op.) L20, L24
135	08226–61410....	STUD M6	4	(op.) L20, L24
136	08911–10610....	NUT-hex M6	4	(op.) L20, L24
137	08915–13610....	WASHER-lock	4	(op.) L20, L24

1974, 3

FIG. 220-8 NISSAN MOTOR CO., LTD

KEY No.	PART NO	PART NAME	QTY	MODELS
	62740–N3201....	BRACKET ASS'Y-licence plate	1	(op.) L20, L24
	16330–~~N3105~~ N3115....	IDLE KIT-compensator	1	(op.) L20, L24
	22318–N3105....	HOSE-vacuum (L=115)	1	(op.) L20, L24
	22318–N3106....	HOSE-vacuum (L=155)	1	(op.) L20, L24
	16335–N3302....	ORIFICE	2	(op.) L20, L24
	16587–N3110....	CONNECTOR-vacuum tube	1	(op.) L20, L24
	22318–N3107....	HOSE-vacuum (L=50)	1	(op.) L20, L24
	18431–N3100....	BRACKET-choke wire	1	(op.) L20, L24
	27675–N3000....	TUBE ASS'Y-air conditioner	1	(op.) L20, L24
	24220–80993....	CLIP	1	(op.) L20, L24

AIR CONDITIONER KIT

	27000–N3025....	AIR CONDITIONER KIT	1	(op.) L20, L24

NOTE

●エレファント　フォーミュラ

高温高速運転時の耐久性にすぐれ常に最高の
エンジン性能を発揮でき信頼度は抜群です。

エレファント
モーターオイル
日産純正

1974, 3

FIG. 221 NISSAN MOTOR CO., LTD

HEATER

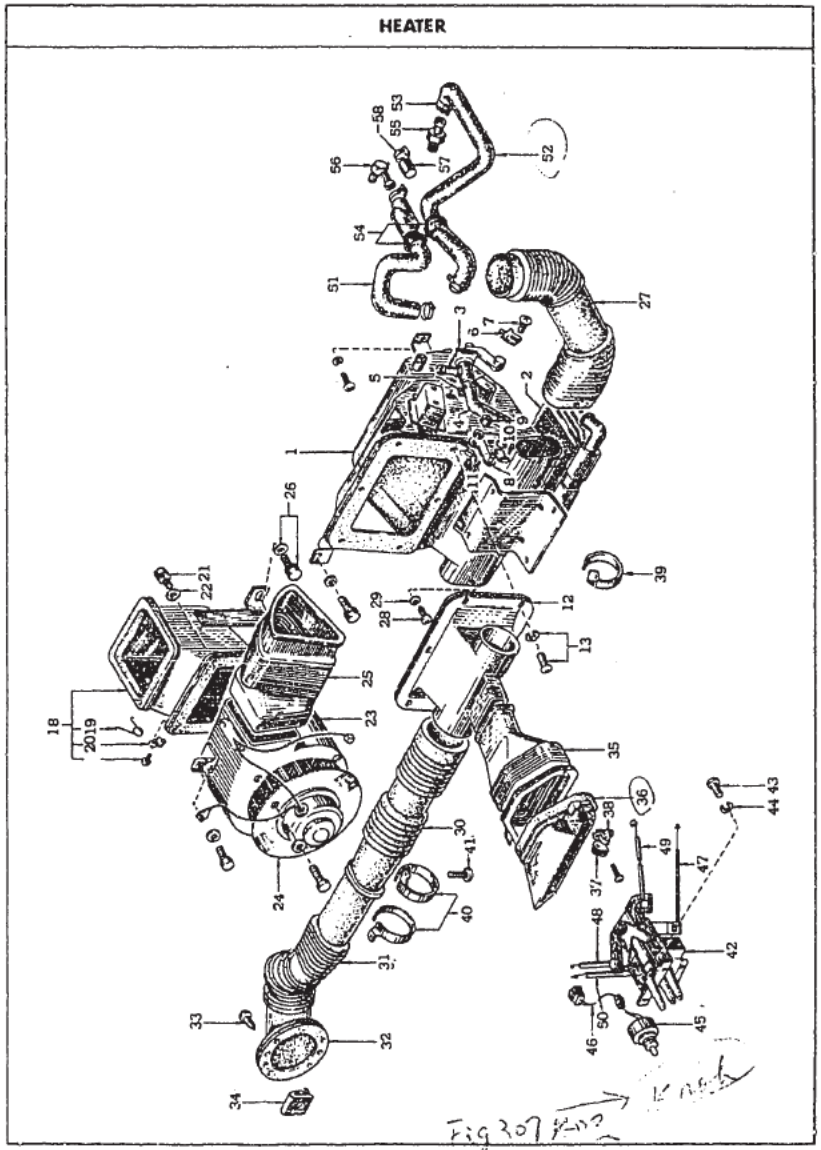

KEY No.	PART NO	PART NAME	QTY	MODELS
		HEATER (Optional Parts)		
1	⑩27110-E4101....	**UNIT ASS'Y-heater**	1	(op.) L20
	⑳27110-E4200....	**UNIT ASS'Y-heater**	1	(op.) PZ
	㊱27110-E8700....	**UNIT ASS'Y-heater (from C/# S30-007501 PS30-000501, HS30-010001)**	1	(op.) ALL
2	27115-E4200....	CORE ASS'Y-heater	1	(op.) PZ
	27115-E4400....	CORE ASS'Y-heater	1	(op.) ALL
3	27116-E4400....	COCK ASS'Y-heater	1	(op.) ALL
4	27050-89909....	HOSE-water	1	(op.) PZ
	27118-E4400....	HOSE-water	1	(op.) ALL
5	08723-12200....	CLAMP-hose	2	(op.) ALL
6	27152-E4400....	CLAMP-cable	2	(op.) ALL
7	08360-41212....	SCREW	2	(op.) L20, S20
	08310-41012....	SCREW	2	(op.) ALL
8	27137-E4100....	LEVER-ventilator valve	1	(op.) ALL
	27137-E8700....	LEVER-ventilator valve (from '72 model)	1	(op.) ALL
9	08911-30610....	NUT ..	1	(op.) L20, PZ
10	08915-13610....	WASHER-lock	1	(op.) L20, PZ
	08310-41012....	SCREW	1	(op.) ALL
	08915-13410....	WASHER-lock	1	(op.) ALL

FIG. 221 NISSAN MOTOR CO., LTD.

KEY No	PART NO	PART NAME	QTY	MODELS
11	27053–E4100....	SPRING-valve	1	(op.) L20, PZ
	27053–E4400....	SPRING-valve (from '72 model)	1	(op.) ALL
12	27170–E4100....	VENTILATOR ASS'Y-air box	1	(op.) L20, PZ
	27170–E4400....	VENTILATOR ASS'Y-air box (from '72 model)	1	(op.) ALL
13	08310–50812....	SCREW	6	(op.) L20, PZ
	08310–51012....	SCREW	6	(op.) ALL
14	27172–E4100....	BRACKET-cable clamp	1	(op.) ALL
15	08310–42012....	SCREW	1	(op.) ALL
16	08915–43510....	WASHER-plain	6	(op.) ALL
17	08363–61226....	SCREW-with lock & plain washer	6	(op.) ALL
18	27160–E4100....	**DUCT ASS'Y-intake**	1	(op.) L20, PZ
	27160–E8700....	**DUCT ASS'Y-intake (from '72 model)**	1	(op.) ALL
19	27054–E4100....	SPRING-valve	1	(op.) L20, PZ
	27054–E8700....	SPRING-valve (from '72 model)	1	(op.) ALL
20	27152–E4400....	CLAMP-cable	1	(op.) ALL
21	08360–61214....	SCREW-with washer	3	(op.) ALL
22	08915–43610....	WASHER-plain	3	(op.) ALL
23	27065–E4100....	CASE ASS'Y-blower	1	(op.) ALL
24	27070–E4105....	MOTOR & FAN ASS'Y	1	(op.) ALL
	27077–E4405....	RESISTANCE ASS'Y	1	(op.) ALL

NISSAN MOTOR CO., LTD. FIG. 221

KEY No	PART NO	PART NAME	QTY	MODELS
25	27066–E4101....	DUCT-adapter	1	(op.) ALL
26	08363–61226....	SCREW-with lock & plain washer	4	(op.) ALL
27	27161–E4401....	DUCT-defroster	2	(op.) ALL
28	08510–71012....	SCREW-tapping	2	(op.) ALL
29	08915–43710....	WASHER-plain	2	(op.) ALL
30	27167–E4400....	DUCT-assist ventilator A	1	(op.) ALL
31	27168–E4400....	DUCT-assist ventilator B	1	(op.) ALL
32	27169–E4400....	DUCT-assist ventilator C	1	(op.) ALL
33	08510–41212....	SCREW-tapping	6	(op.) ALL
34	08963–10410....	NUT-spring	6	(op.) ALL
35	27171–E4400....	DUCT-center	1	(op.) ALL
36	27671–E4400....	DUCT-center front	1	(op.) ALL
37	27672–E4400....	SPRING-center grille	2	(op.) ALL
38	27673–E4400....	BEARING-center grille	2	(op.) ALL
39	27661–E4100....	CLAMP-ventilator duct	1	(op.) L20, PZ
40	27661–E4401....	CLAMP-ventilator duct (from '70 model)	3	(op.) ALL
41	08310–40812....	SCREW	2	(op.) ALL
42	27130–E4101....	CONTROL ASS'Y-heater	1	(op.) L20, PZ
42	27130–E8700....	CONTROL ASS'Y-heater (from '72 model)	1	(op.) ALL
43	08310–40612....	SCREW	4	(op.) ALL

1974, 3

FIG. 221 NISSAN MOTOR CO. LTD.

KEY No.	PART NO	PART NAME	QTY	MODELS
44	08915–13410....	WASHER-lock	4	(op.) ALL
45	27140–E4400....	SWITCH ASS'Y-fan	1	(op.) ALL
46	27155–E4400....	WIRE ASS'Y-heater control	1	(op.) ALL
47	27141–E4400....	CABLE ASS'Y-control "DEF TO ROOM"	1	(op.) L20, PZ
47	27141–E8700....	CABLE ASS'Y-control "DEF to ROOM" (from '72 model)	1	(op.) ALL
48	27142–E4400....	CABLE ASS'Y-control "HEAT to COOL"	1	(op.) L20, PZ
48	27142–E8700....	CABLE ASS'Y-control "HEAT to COOL" (from '72 model)	1	(op.) ALL
49	27145–E4401....	CABLE ASS'Y-control "IN to OUT" (for air intake door)	1	(op.) L20, PZ
49	27143–E8700....	CABLE ASS'Y-control "IN to OUT" (from '72 model)	1	(op.) ALL
→ 27143-E8701		(for air intake door, from '73)	1	=
50	27146–E4401....	CABLE ASS'Y-control "VENT to HEAT"	1	(op.) L20, PZ
50	27144–E8700....	CABLE ASS'Y-control "VENT to HEAT" (from '72 model)	1	(op.) ALL
51	27181–E4401....	HOSE-water inlet	1	(op.) L20, L24
	27181–N3000....	HOSE-water inlet (from '72-8)	1	(op.) L20, L24
51	27181–E4200....	HOSE-water inlet	1	(op.) PZ
52	27185–E4401....	HOSE-water outlet	1	(op.) L20, L24
52	27185–E4200....	HOSE-water outlet	1	(op.) PZ
53	08723–12200....	CLAMP-hose	4	(op.) ALL
54	27243–28500....	GROMMET-rubber	2	(op.) ALL
55	27070–66000....	CONNECTOR-heater	1	(op.) PZ
56	27195–E4400....	CONNECTOR-water	1	(op.) L20, L24

KEY No.	PART NO	PART NAME	QTY	MODELS
57	14058–25500....	CAP-connector	1	(op.) L20, L24
58	08723–12400....	CLAMP-hose	1	(op.) L20, L24
	27191–E8206....	CLAMP-hose	1	(op.) A-all

FIG. 222-A NISSAN MOTOR CO., LTD.

CLUTCH OPERATING CYLINDER (11/16 INCH)

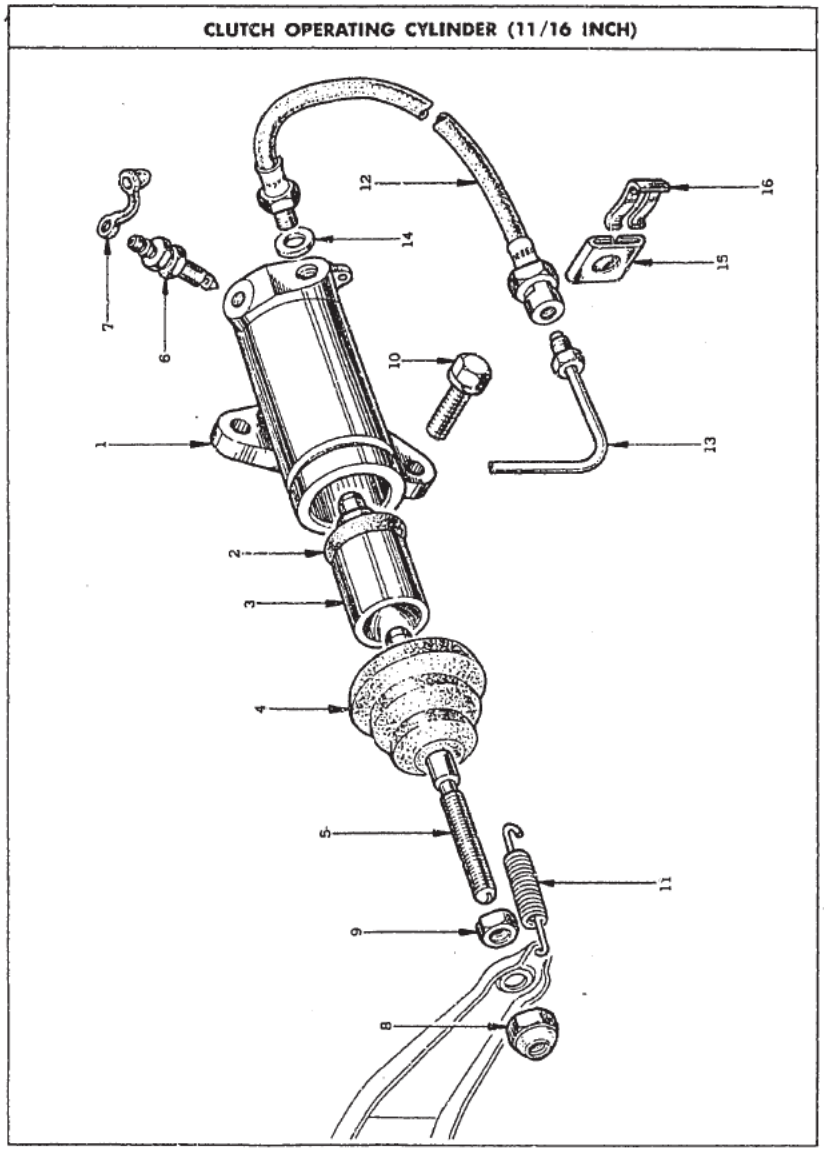

KEY No.	PART NO	PART NAME	QTY	MODELS
		CLUTCH OPERATING CYLINDER (L20, L24 exc. A-all) (up to '72 model)		
	30620–28502....	**CYLINDER ASS'Y-clutch operating (NABCO, 11/16 inch)**	1	L20, L24
1	★ 30621–28500....	CYLINDER	1	L20, L24
2	30624–28500....	CUP-piston	1	L20, L24
3	30625–28500....	PISTON	1	L20, L24
4	30627–76000....	COVER-dust	1	L20, L24
5	30628–28500....	ROD-push	1	L20, L24
6	41128–18000....	BLEEDER	1	L20, L24
7	41129–30001....	CAP-bleeder	1	L20, L24
8	30547–78001....	NUT-push, withdrawal lever	1	L20, L24
9	08911–30810....	NUT	1	L20, L24
	30620–28525....	**REPAIR KIT-clutch operating cylinder, A (NABCO, 11/16 inch)**	(1)	L20, L24
(2)	30624–28500....	CUP-piston	1	L20, L24
(4)	30627–76000....	COVER-dust	1	L20, L24
(7)	41129–30001....	CAP-bleeder	1	L20, L24
	30620–28513....	**CYLINDER ASS'Y-clutch operating (TOKICO, 11/16 inch)**	1	L20, L24
1	★ 30621–28510....	CYLINDER	1	L20, L24
2	30624–86400....	CUP-piston	1	L20, L24
3	30625–86400....	PISTON	1	L20, L24

FIG. 222-A NISSAN MOTOR CO. LTD.

KEY No.	PART NO.	PART NAME	QTY	MODELS
4	30627-25510....	COVER-dust	1	L20, L24
5	30628-26510....	ROD-push	1	L20, L24
6	41128-21011 ~~41128-21010~~....	BLEEDER	1	L20, L24
7	41129-30001....	CAP-bleeder	1	L20, L24
8	30547-78001....	NUT-push, withdrawal lever	1	L20, L24
9	08911-30810....	NUT	1	L20, L24
	30620-28528....	**REPAIR KIT-clutch operating cylinder, A** (TOKICO, 11/16 inch)	(1)	L20, L24
(2)	30624-86400....	CUP-piston	1	L20, L24
(4)	30627-25510....	COVER-dust	1	L20, L24
(7)	41129-30001....	CAP-bleeder	1	L20, L24
10	08121-03065....	BOLT-with lock washer	2	L20, L24
		CLUTCH RELEASE		
11	30533-21010....	SPRING-return, withdrawal lever	1	L20, L24
12	46212-21000....	HOSE ASS'Y-pressure (L=230mm)	1	L20, L24
13	30650-E4101....	TUBE ASS'Y-clutch master cylinder to hose	1	L20, L24
14	46237-18000....	GASKET-hose	1	L20, L24
	46237-A4600....	GASKET-hose (from '70-1)	1	L20, L24
15	46205-61000....	PLATE-lock	1	L20, L24
16	46206-18000....	SPRING-lock	1	L20, L24

NOTE

●エレファント　フォーミュラ

国際ラリーやレースにおける輝かしい実績と
豊富な経験を活かして開発に成功した高性能
車用の画期的なモーターオイルです。

エレファント
モーターオイル

日産純正

1974, 3

FIG. 222-B NISSAN MOTOR CO., LTD.

CLUTCH OPERATING CYLINDER

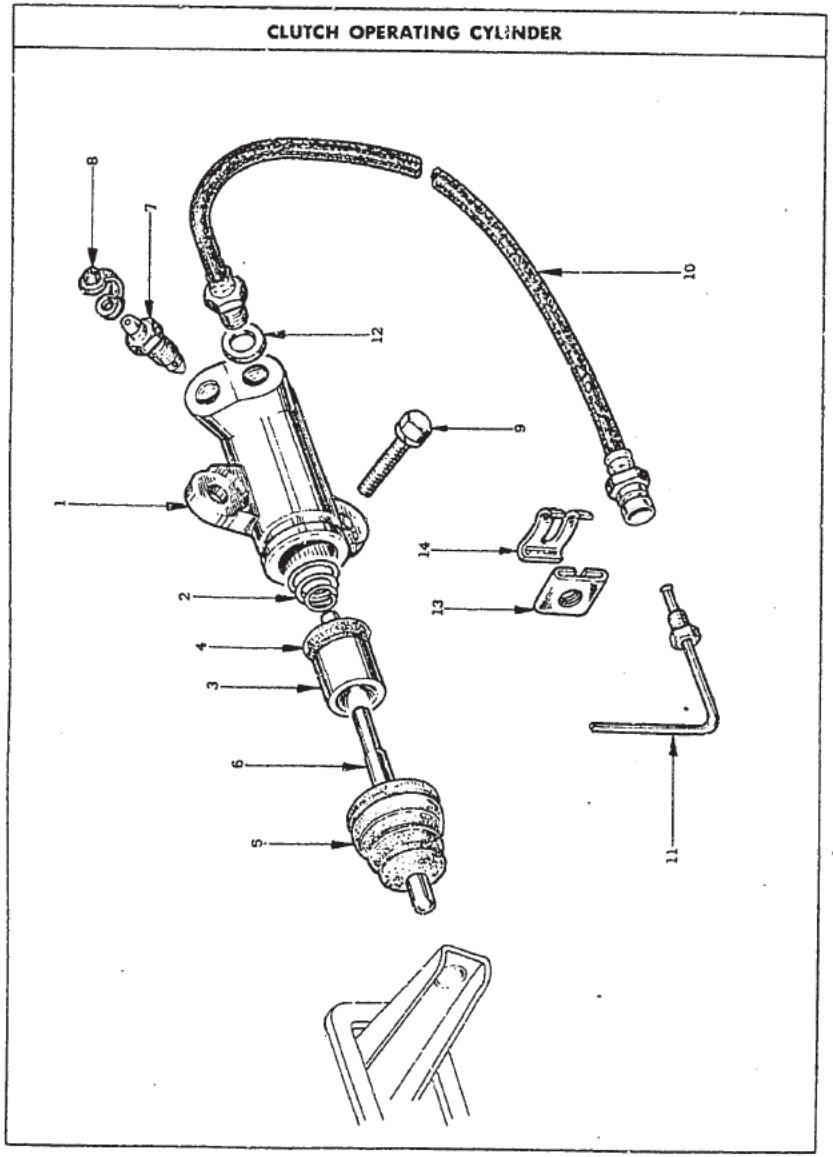

KEY No	PART NO	PART NAME	QTY	MODELS
		CLUTCH OPERATING CYLINDER (L20, L24 exc. A-all) (from '73 model)		
	30620–S0100....	**CYLINDER ASS'Y-clutch operating (NABCO 3/4 inch)**	1	L20, L24
1	★ 30621–E3400....	CYLINDER	1	L20, L24
2	30622–E3400....	SPRING-piston	1	L20, L24
3	30625–27260....	PISTON	1	L20, L24
4	30624–21000....	CUP-piston	1	L20, L24
5	30627–E3400....	BOOT	1	L20, L24
6	30628–S0100....	ROD-push	1	L20, L24
7	41128–18000....	SCREW-bleeder	1	L20, L24
8	41129–30001....	CAP-bleeder screw	1	L20, L24
	30620–S0125....	**REPAIR KIT-clutch operating cylinder (NABCO 3/4 inch)**	(1)	L20, L24
(4)	30624–21000....	CUP-piston	1	L20, L24
(5)	30627–E3400....	BOOT	1	L20, L24
(8)	41129–30001....	CAP-bleeder screw	1	L20, L24
9	08121–03065....	BOLT-with lock washer	2	L20, L24
		CLUTCH RELEASE		
10	46212–21000....	HOSE ASS'Y-pressure	1	L20, L24
11	30650–N3000....	TUBE ASS'Y-clutch master cylinder to hose	1	L20, L24

1974, 3

FIG. 222-B NISSAN MOTOR CO., LTD.

KEY No.	PART NO	PART NAME	QTY	MODELS
12	46237–A4600....	GASKET-clutch hose	1	L20, L24
13	46205–61000....	PLATE-lock	1	L20, L24
14	46206–18000....	SPRING-lock	1	L20, L24

NOTE

●エレファント　スーパーPCV

耐摩耗性がすぐれているので、いつまでも良好なエンジン性能が維持されしかも燃費を節約できます。

エレファント
モーターオイル
日産純正

FIG. 222-C NISSAN MOTOR CO., LTD

CLUTCH OPERATING CYLINDER (5/8 INCH)

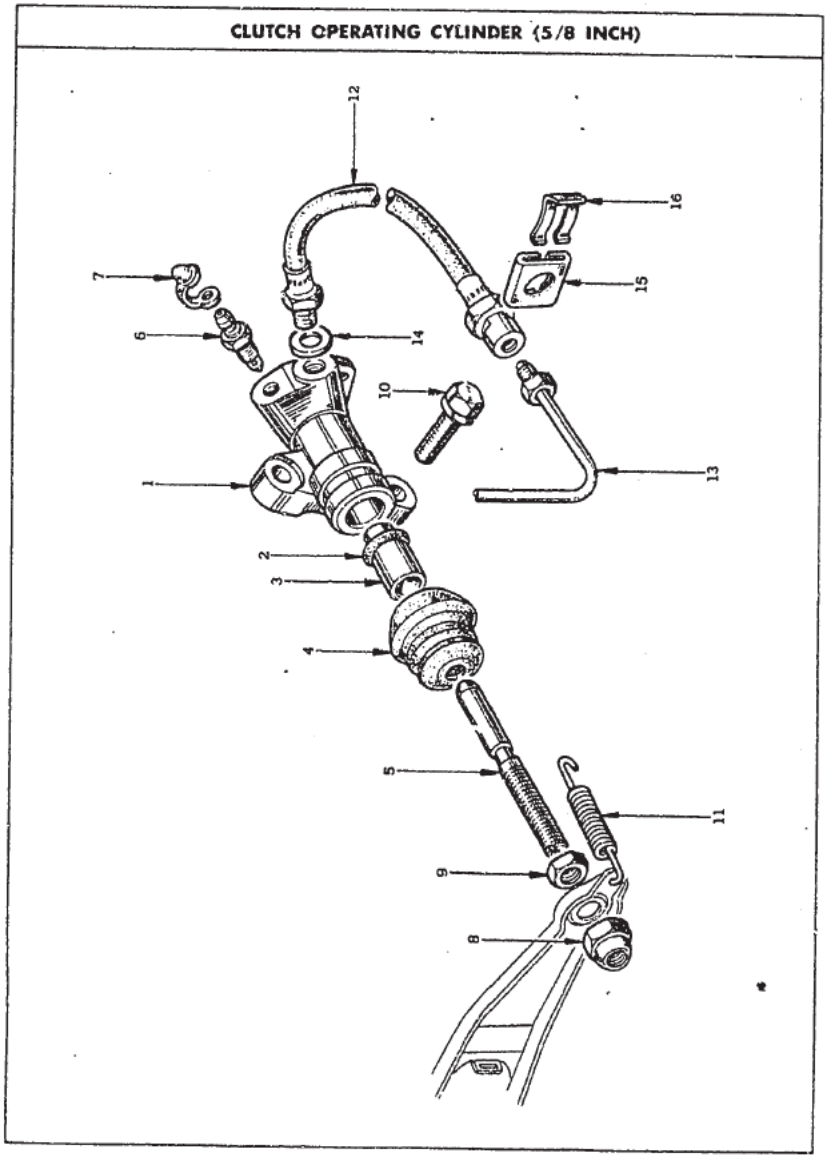

KEY No.	PART NO.	PART NAME	QTY	MODELS
		CLUTCH OPERATING CYLINDER (S20) (up to '72 model)		
	30620-28800....	**CYLINDER ASS'Y-clutch operating (NABCO, 5/8 inch)**	1	S20
1	★30621-28800....	CYLINDER	1	S20
2	30624-21000....	CUP-piston	1	S20
3	30625-36900....	PISTON	1	S20
4	30627-76000....	COVER-dust	1	S20
5	30628-21000....	ROD-push	1	S20
6	41128-18000....	BLEEDER	1	S20
7	41129-30001....	CAP-bleeder	1	S20
8	30547-78001....	NUT-push, withdrawal lever	1	S20
9	08911-30810....	NUT	1	S20
	30620-28825....	**REPAIR KIT-clutch operating cylinder, A (NABCO, 5/8 inch)**	(1)	S20
(2)	30624-21000....	CUP-piston	1	S20
(4)	30627-76000....	COVER-dust	1	S20
(7)	41129-30001....	CAP-bleeder	1	S20
	30620-A0110....	**CYLINDER ASS'Y-clutch operating (TOKICO, 5/8 inch)**	1	S20
1	★30621-A0110....	CYLINDER	1	S20
2	46065-21010....	CUP-piston	1	S20
3	30625-28810....	PISTON	1	S20

1974. 3

FIG. 222-C NISSAN MOTOR CO. LTD.

KEY No	PART NO	PART NAME	QTY	MODELS
4	30627-21010....	COVER-dust	1	S20
5	30628-28510....	ROD-push	1	S20
6	41128-21011....	BLEEDER	1	S20
7	41129-30001....	CAP-bleeder	1	S20
8	30547-78001....	NUT-push, withdrawal lever	1	S20
9	08911-30810....	NUT	1	S20
	30620-28827....	REPAIR KIT-clutch operating cylinder, A (TOKICO, 5/8 inch)	(1)	S20
(2)	46065-21010....	CUP-piston	1	S20
(4)	30627-21010....	COVER-dust	1	S20
(7)	41129-30001....	CAP-bleeder	1	S20
10	08121-03065....	BOLT-with lock washer	1	S20
		CLUTCH RELEASE		
11	30533-21010....	SPRING-return, withdrawal lever	1	S20
12	46212-21000....	HOSE ASS'Y-pressure (L=230mm)	1	S20
13	30650-E4201....	TUBE ASS'Y-clutch master cylinder to hose	1	S20
14	46237-18000....	GASKET-hose	1	S20 ┐ × ┘
	46237-A4600....	GASKET-hose (from '70-1)	1	S20
15	46205-61000...	PLATE-lock	1	S20
16	46206-18000....	SPRING-lock	1	S20

NOTE

●エレファント　スーパーPCV

スラッジやワニスの堆積を防止する能力はずばぬけておりエンジン内部をきれいに保ちます。低温スラッジでオイルの通路を閉鎖することもありません。

日産純正 エレファント モーターオイル

FIG. 223 NISSAN MOTOR CO., LTD.

CLUTCH MASTER CYLINDER & PEDAL

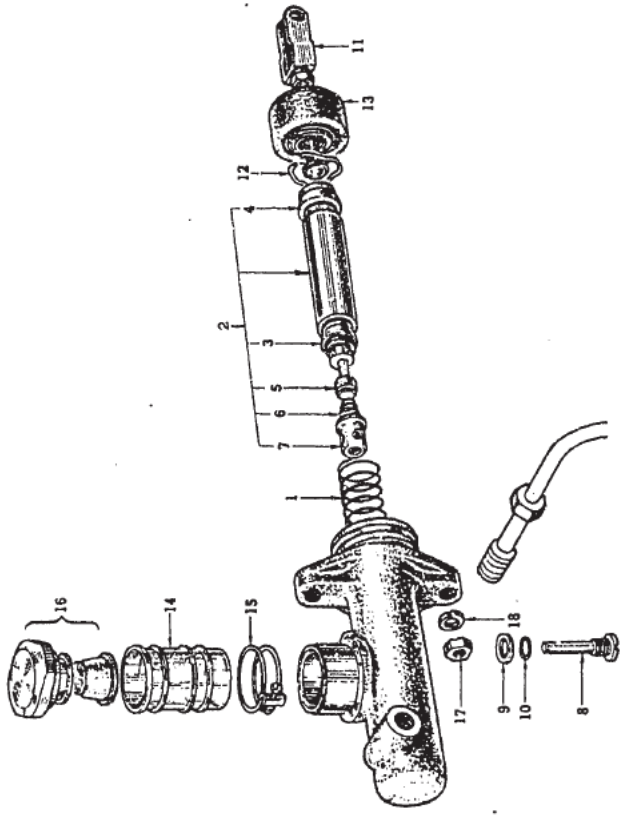

KEY No.	PART NO	PART NAME	QTY	MODELS
		CLUTCH MASTER CYLINDER (exc. A-all)		
	30610–E4300....	**CYLINDER ASS'Y-clutch master (NABCO)**	1	L20 ┐○
	30610–E4301....	**CYLINDER ASS'Y-clutch master (NABCO) (from '69-11)**	1	L20 ┘
1	46061–30000....	SPRING-return, piston	1	L20
2	46076–08700....	**PISTON ASS'Y-cylinder**	1	L20
3	46065–15800....	CUP-piston (S)	1	L20
4	46064–30002....	CUP-piston (P)	1	L20
5	46073–30800....	VALVE ASS'Y	1	L20
6	46076–30800....	SEAT-spring	1	L20
7	46056–27260....	SPRING-valve	1	L20
8	46032–27260....	SCREW-piston stopper	1	L20
9	46043–27260....	PACKING	1	L20
10	46079–27260....	RING-"O"	1	L20
11	30631–E4100....	ROD ASS'Y-push	1	L20 ┐△
	30631–E4101....	ROD ASS'Y-push	1	L20 ┘
12	46070–27260....	RING-piston stopper	1	L20
13	46084–18900....	BOOT	1	L20 ┐×┐○
	46100–27260....	BOOT (from '70-7)	1	L20 ┘

1974, 3

FIG. 223 NISSAN MOTOR CO. LTD.

KEY No	PART NO	PART NAME	QTY	MODELS
14	46090–10600....	RESERVOIR-oil	1	L20 ┐
	46090–21000....	RESERVOIR-oil	1	L20 △ ┘
15	46016–12200....	BAND-reservoir	1	L20
16	46020–18000....	CAP-oil reservoir	1	L20 ┐
	46020–E0300....	CAP-oil reservoir	1	L20 △ ┘
17	08911–10810....	NUT	2	L20
18	08915–23810....	WASHER-lock	2	L20

REPAIR KIT

30610-S2125	Kit-Repair clutch cyl	1	L20.
46076-08700	Comp: PISTON	1	〃
46100-27260	BOOT	1	〃
46070-27260	RING	1	〃
46079-27260	GASKET	1	〃

NOTE

●エレファント　スーパーデラックス

ドロドロした低温スラッジがオイルの通路をふさぐ心配がないので信号待ちの多い市街地を走る場合でも快調です。

エレファント
モーターオイル
日産純正

1974. 3

FIG. 224 NISSAN MOTOR CO., LTD.

CLUTCH MASTER CYLINDER & PEDAL

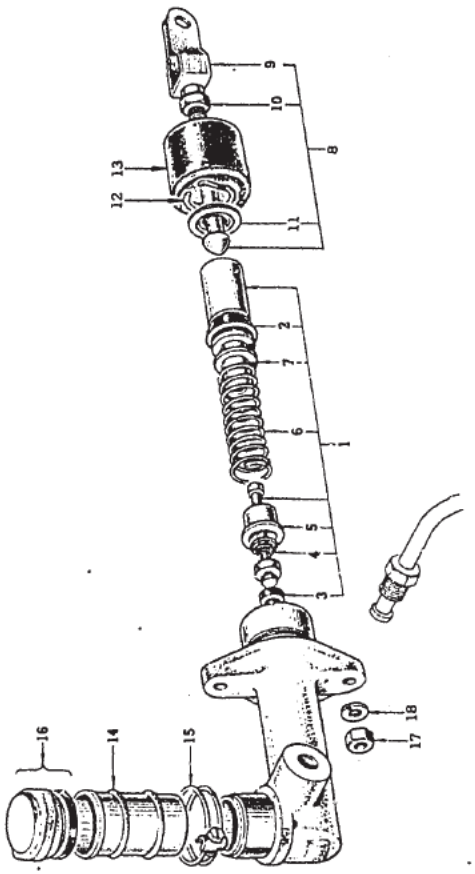

KEY No	PART NO.	PART NAME	QTY	MODELS
		CLUTCH MASTER CYLINDER		
	30610−E4100....	**CYLINDER ASS'Y-clutch master (NABCO)**	1	S20
	30610−E4101....	**CYLINDER ASS'Y-clutch master (NABCO) (from '69-12)**	1	L24, S20
	30610−E4200....	**CYLINDER ASS'Y-clutch master (NABCO) (from '72-1)**	1	L24, S20
	30610−E4201....	**CYLINDER ASS'Y-clutch master (NABCO) (from '72-10)**	1	L24, S20
1	30625−21000....	**PISTON ASS'Y-cylinder**	1	S20
	★46077−21000....	**PISTON ASS'Y-cylinder (from '69-12)**	1	L24, S20
	★30625−N0100....	**PISTON ASS'Y-cylinder (up to '72-10)**	1	L24, S20
	★30615−N0100....	**PISTON ASS'Y-cylinder (from '72-10)**	1	L24, S20 注1.
2	30624−21000....	CUP-piston	1	S20
	46065−21000....	CUP-piston	1	L24, S20
3	46074−30800....	SEAT-valve	1	L24, S20
4	30622−21000....	SPRING-valve (up to '72-10)	1	L24, S20
5	30623−21000....	SEAT-spring	1	L24, S20
6	46061−30000....	SPRING-return	1	L24, S20
7	30623−21001....	SEAT-spring	1	L24, S20
8	30631−E4100....	**ROD ASS'Y-push**	1	S20
	30631−E4101....	**ROD ASS'Y-push (from '69-12)**	1	L24, S20
9	30629−21000....	HEAD-push rod	1	L24, S20

注1. 30615-N0100は非分解式のピストンの為部品交換はリペア キット(30610-N0127)を御利用下さい。

1974. 3

FIG. 224 NISSAN MOTOR CO., LTD

KEY No.	PART NO.	PART NAME	QTY	MODELS	
10	46103–21000....	NUT-lock	1	S20	×1
	46103–E4101....	NUT-lock (from '69-12)	1	L24, S20	
11	46082–35200....	STOPPER-piston	1	L24, S20	
12	46070–27260....	RING-stopper	1	L24, S20	
13	46084–18900....	COVER-dust	1	S20	×1
	46100–27260....	COVER-dust (from '70-7)	1	L24, S20	
14	46090–21000....	RESERVOIR-oil	1	L24, S20	
15	46016–12200....	BAND-reservoir	1	L24, S20	
16	46020–18000....	CAP-reservoir	1	S20	△1
	46020–E0300.....	CAP ASS'Y-oil reservoir	1	L24, S20	
17	08911–10810....	NUT	2	L24, S20	
18	08915–13810....	WASHER-lock	2	L24, S20	
	30610–21025....	REPAIR KIT-master cylinder "A"	1	L24, S20	△1
	30610–21026....	REPAIR KIT-master cylinder "B"	1	L24, S20	
	30610–N0126....	REPAIR KIT-master cylinder "B"	1	L24, S20	△1
	30610–N0127....	REPAIR KIT-master cylinder "B" (from '72-10)	1	L24, S20	

NOTE

●エレファント　スーパーPCV

PCV装置によって発生しやすくなったサビや汚れを完全に抑制する高度の特性を備えた新時代のオイルです。

エレファント
モーターオイル
日産純正

1974, 3

FIG. 225 NISSAN MOTOR CO., LTD.

AUTO TRANSMISSION CONTROL

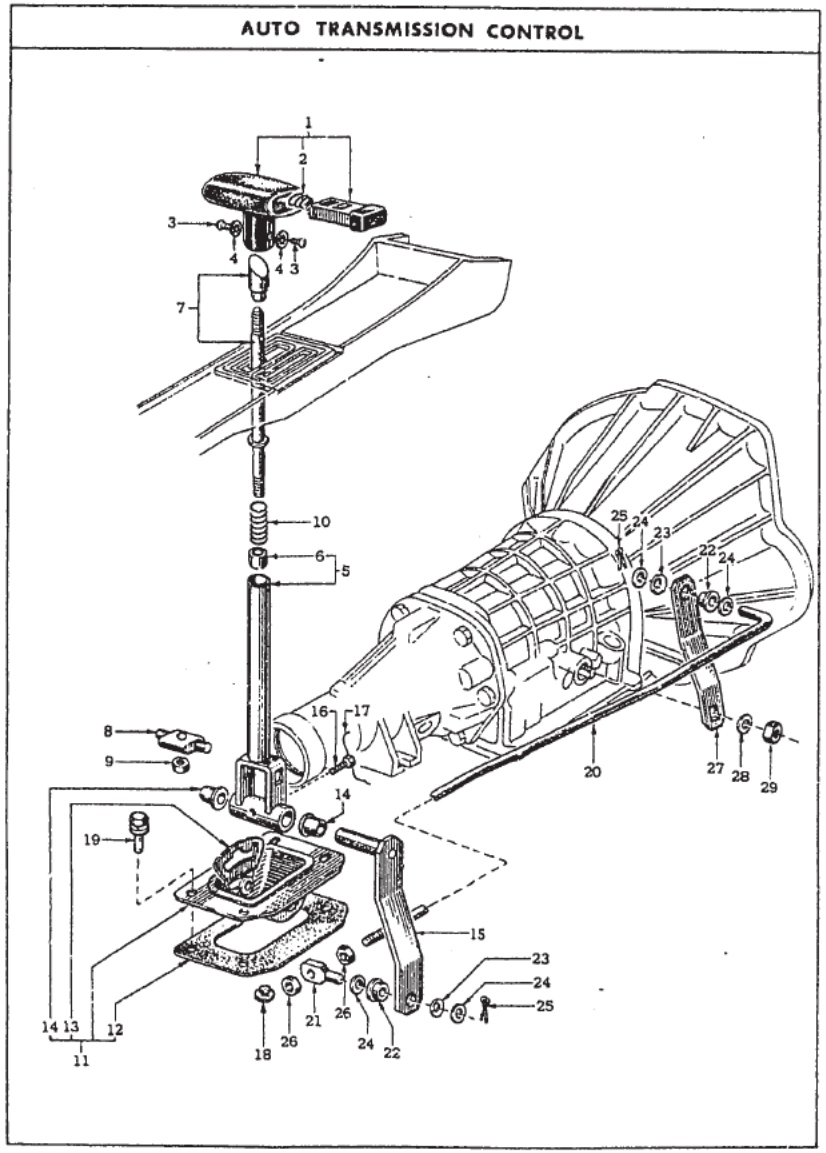

KEY No	PART NO.	PART NAME	QTY	MODELS
		AUTO TRANSMISSION CONTROL		
	34902–E4501....	**DEVICE ASS'Y-control**	1	A-all
1	34920–P2725....	**KNOB SET-control lever**	1	A-all
	34920–P2726....	**KNOB SET-control lever**	1	A-all
	34920–P4925....	**KNOB SET-control lever (from '72-7)**	1	A-all
	34920-P4926		1	
2	34922–P2700....	SPRING-return, button	1	A-all
3	34925–A7905....	SCREW	2	A-all
	34925–P4900....	SCREW (from '72-7)	2	A-all
4	08916–13510....	WASHER-tooth lock	2	A-all
5	34903–E4701....	**LEVER ASS'Y-control**	1	A-all
6	34927--A7905....	BUSH-control tube	1	A-all
7	34912–E4701....	ROD COMP.-compression	1	A-all
8	34917–A7901....	PIN-position plate	1	A-all
9	08911–30610....	NUT	1	A-all
10	34926–A7905....	SPRING-return	1	A-all
11	34925–E4701....	**SUPPORT ASS'Y-lever shaft**	1	A-all
12	34928–E4700....	RUBBER-sealing	1	A-all
13	★34930–E4701....	BRACKET-position plate	1	A-all
14	★34530–73000....	BUSH-lever shaft	2	A-all

1973. 7

FIG. 225 NISSAN MOTOR CO., LTD

KEY No	PART NO	PART NAME	QTY	MODELS
15	34915–E4701....	SHAFT ASS'Y-lever	1	A-all
16	34929–E4700....	SCREW-locking	1	A-all
17	34473–30000....	WIRE-locking screw	1	A-all
18	66208–65000....	PLUG	1	A-all
19	08110–82525....	BOLT-with lock & plain washer	4	A-all
20	34935–E4701....	ROD-selector	1	A-all
21	34482–73700....	TRUNNION-joint	1	A-all
22	34481–73700....	INSULATOR	2	A-all
23	34483–73700....	WASHER-spring	2	A-all
24	34484–73700....	WASHER-plain	4	A-all
25	00921–11810....	PIN-split cotter	2	A-all
26	08911–30810....	NUT	2	A-all
27	31913–E4701....	LEVER-selector range	1	A-all
28	08916–34410....	WASHER-tooth lock	1	A-all
29	08911–34410....	NUT	1	A-all

NOTE

●エレファント　スーパーデラックス

冬期又は寒冷地にてノロノロ運転で発生しがちな錆や腐食からエンジンを守ります。

エレファント
モーターオイル
日産純正

1974, 3

FIG. 226 NISSAN MOTOR CO., LTD.

PROPELLER SHAFT

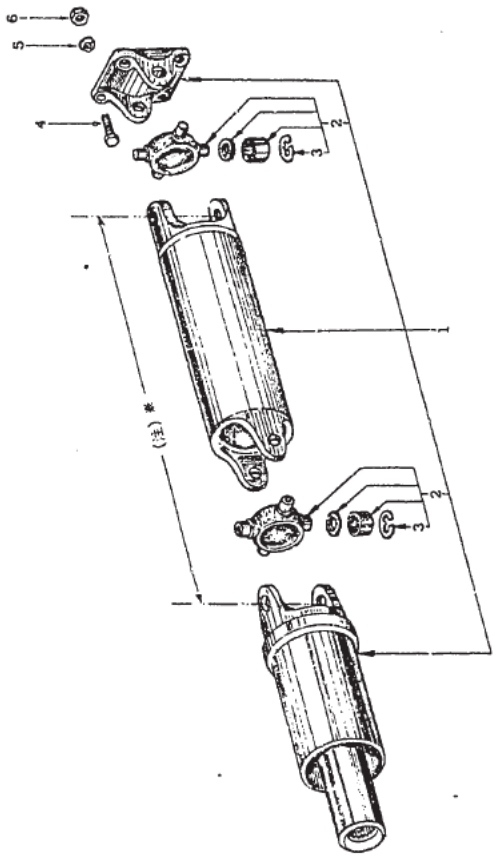

(注) 本文中のL寸法は図示★個所の寸法を示します。

KEY No.	PART NO	PART NAME	QTY	MODELS	

PROPELLER SHAFT

1	★37000−E4200....	SHAFT COMP.-propeller (L=537mm)	1	4 speed A-all	
	★37000−E8800....	SHAFT COMP.-propeller (L=572mm)(from '72 model)	1	4 speed A-all	
	★37000−N3000....	SHAFT COMP.-propeller (L=572mm)(from '73 model)	1	ALL	注1.
2	★37125−14626....	JOURNAL KIT-with bearing	2	ALL	
3	37146−14600....	RING-snap, bearing race (2.00t,)	8	ALL	
	37147−14600....	RING-snap, bearing race (2.02t,)			
	37148−14600....	RING-snap, bearing race (2.04t,)			
	37149−14600....	RING-snap, bearing race (2.06t,)			
	37150−14600....	RING-snap, bearing race (2.08t,)			
	37151−14600....	RING-snap, bearing race (2.10t,)			
	37152−14600....	RING-snap, bearing race (2.12t,)			
4	01111−00051....	BOLT	4	ALL	
5	08915−13810....	WASHER-lock	4	ALL	
6	08911−20810....	NUT	4	ALL	

注1. 上記のプロペラシャフト37000-N3000は4スピード及び5スピード車共通化を'73年式車より実施致しました。

PROPELLER SHAFT (5 SPEED)

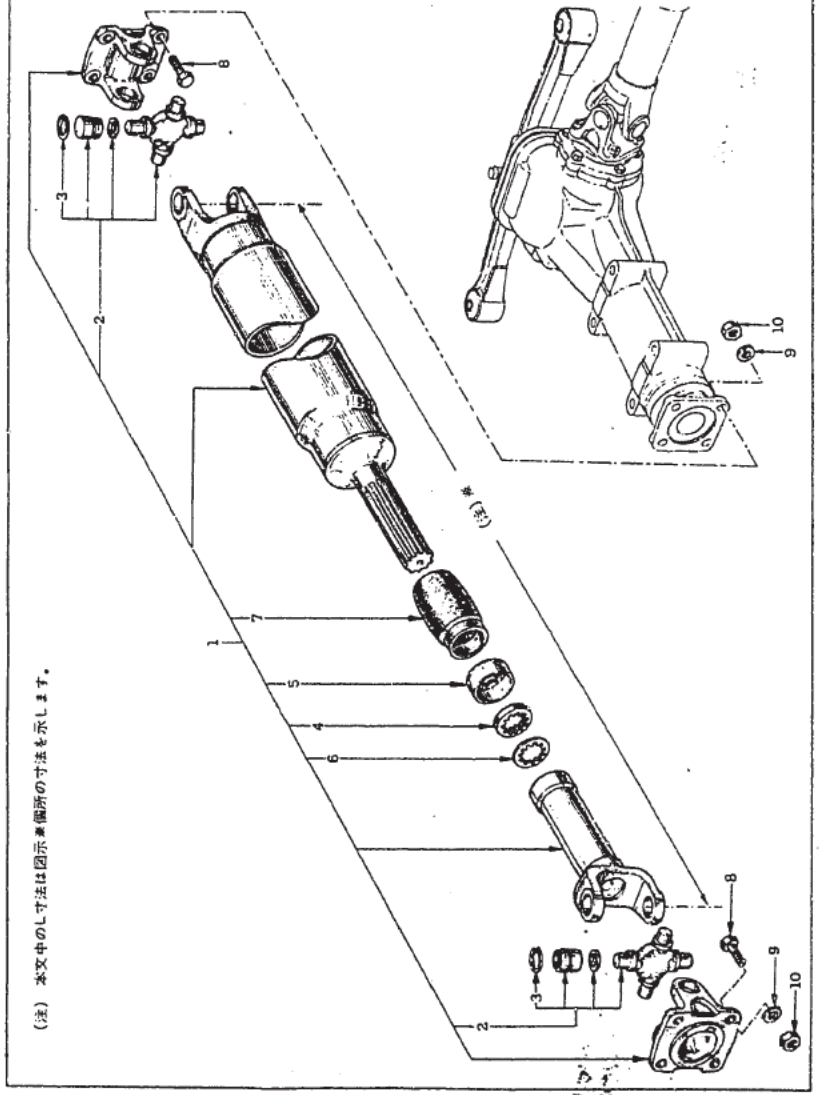

PROPELLER SHAFT (5 SPEED)

KEY No.	PART NO	PART NAME	Q'ty	MODELS
1	★37000—E4100....	SHAFT COMP.-propeller with joint (L=520mm)	1	5 speed
	★37000—E8700....	SHAFT COMP.-propeller with joint (L=555mm)(from '72 model)	1	5 speed
	★37000—E8710....	SHAFT COMP.-propeller with joint (L=555mm)(up to '72 model)	1	5 speed 注1.
2	★37125—14626....	JOURNAL KIT-with bearing	2	5 speed
3	37146—14600....	RING-snap, bearing race (2.00t,白)	8	5 speed
	37147—14600....	RING-snap, bearing race (2.02t,黄)		
	37148—14600....	RING-snap, bearing race (2.04t,赤)		
	37149—14600....	RING-snap, bearing race (2.06t,緑)		
	37150—14600....	RING-snap, bearing race (2.08t,青)		
	37151—14600....	RING-snap, bearing race (2.10t,茶)		
	37152—14600....	RING-snap, bearing race (2.12t,無色)		
4	37220—20100....	SEAL-oil	1	5 speed
5	37223—20100....	RETAINER-oil seal	1	5 speed
6	37224—20100....	WASHER-retainer	1	5 speed
7	37226—20400....	COVER-dust	1	5 speed
8	01111—00051....	BOLT	8	5 speed
9	08915—13510....	WASHER-lock	8	5 speed
10	08911—20810....	NUT	8	5 speed

tixing propeller shaft

注1. '73年車よりプロペラシャフトのタイプを変更したのに伴い4スピード車用に統一致しました。

1973. 7

FIG. 228 NISSAN MOTOR CO., LTD.

REAR DRIVE SHAFT

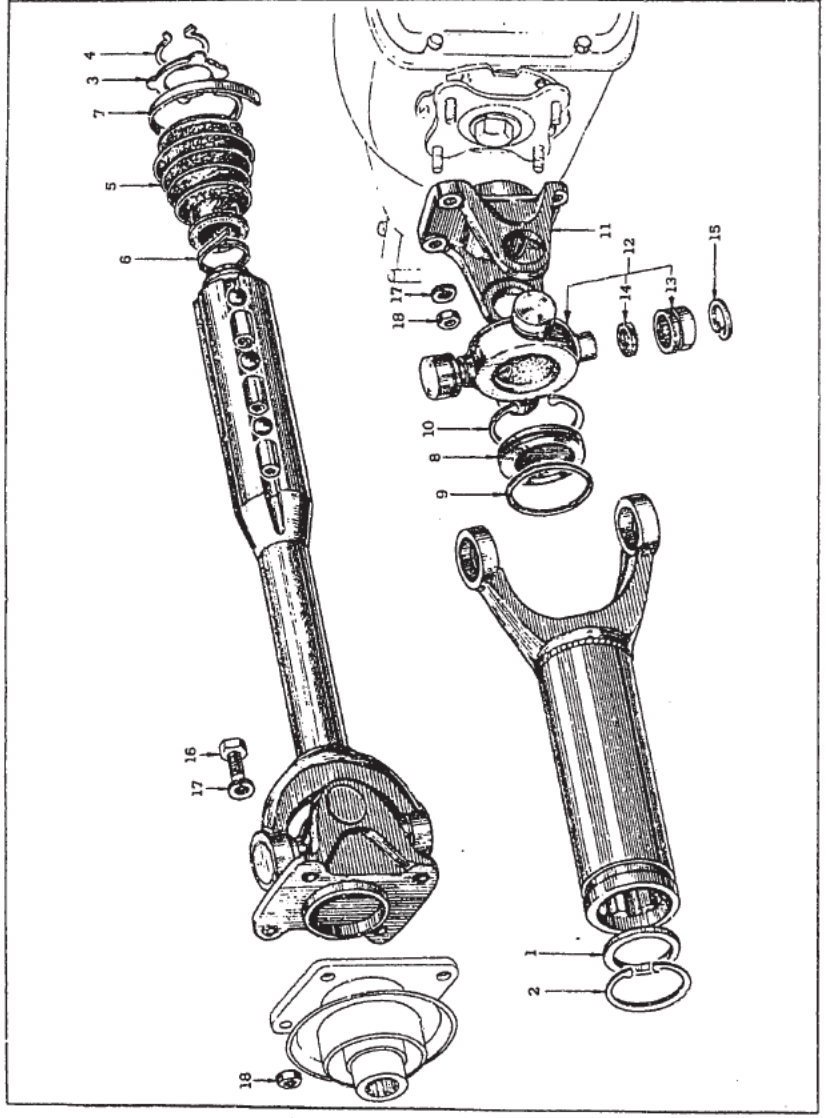

NISSAN MOTOR CO. LTD. FIG. 228

KEY No.	PART NO.	PART NAME	QTY	MODELS
		REAR DRIVE SHAFT		
	39600–E4150....	**SHAFT ASS'Y-rear drive, paint less**	2	ALL
	39600–E4156....	**SHAFT ASS'Y-rear drive, with paint (from '73-3)**	2	ALL
	39600–N3751....	**SHAFT ASS'Y-rear drive, (from '73-5)**	2	ALL
1	39657–21000....	STOPPER-sleeve yoke	2	ALL
2	00922–25000....	RING-snap	4	ALL
3	39653–21000....	STOPPER-drive shaft	2	ALL
4	39654–21000....	RING-snap	2	ALL
5	39655–21002....	BOOT-rubber	2	ALL
6	39658–21000....	BAND-boot	2	ALL
7	39659–21000....	BAND-boot	2	ALL
8	39661–21000....	PLUG-sleeve yoke	2	ALL
9	39662–21000....	SEAL-"O" ring	2	ALL
10	00922–25000....	RING-snap	4	ALL
11	39617–A0600....	YOKE-flange	4	ALL
12	39625–21001....	**SPIDER ASS'Y-with bearing**	4	ALL
	39625–21026....	**SPIDER ASS'Y-with bearing (from '70-11)**	4	ALL

FIG. 228 NISSAN MOTOR CO., LTD

KEY No.	PART NO.	PART NAME	QTY	MODELS
13	39630-21001....	RACE ASS'Y-bearing	16	ALL ┐△
	39630-21004....	RACE ASS'Y-bearing (from '73-3)	16	ALL ┘
14	39634-21001.... *	SEAL-oil	16	ALL
15	39646-21001....	RING-snap, bearing race (1.49t)	16	ALL
16	39628-E4100....	BOLT)	 8	ALL
17	08915-14010....	WASHER-lock) fixing axle shaft to wheel side	16	ALL
18	39627-E4100....	NUT)	 16	ALL

Other size

39647-21001 (1.52t) 39649-21001 (1.58t) 39647-21002 (1.64t)
39648-21001 (1.55t) 39646-21002 (1.61t) 39648-21002 (1.67t)

NOTE

●エレファント　フォーミュラ

高温高速運転時の耐久性にすぐれ常に最高のエンジン性能を発揮でき信頼度は抜群です。

エレファント
モーターオイル

日産純正

FIG. 229 NISSAN MOTOR CO., LTD.

HAND BRAKE CONTROL

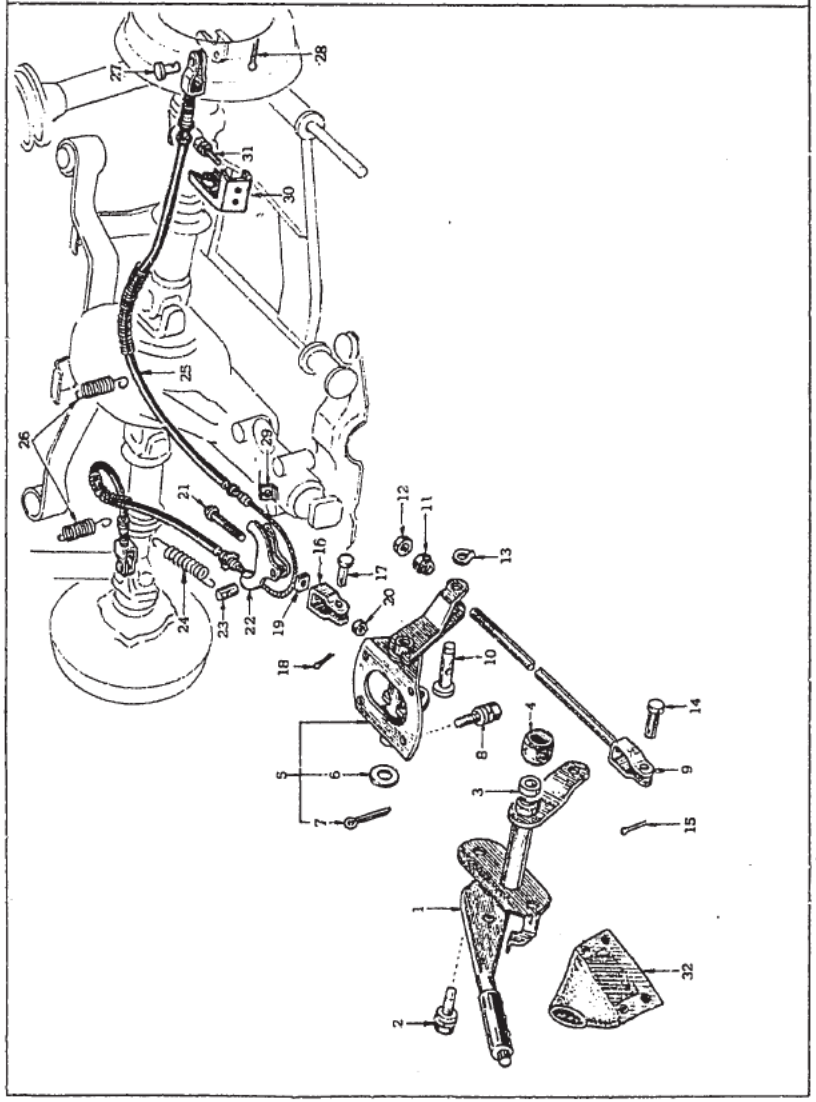

NISSAN MOTOR CO. LTD. FIG. 229

KEY No	PART NO	PART NAME	QTY	MODELS
		HAND BRAKE CONTROL		
1	36010-E4102....	CONTROL ASS'Y-hand brake	1	ALL
2	08120-82533....	SCREW-with washer	2	ALL
3	36012-E4100....	BUSH-hand brake shaft (nylon)	1	ALL
4	36463-E4100....	*BOOT-hand brake lever shaft	1	ALL
5	36210-E4102....	ARM ASS'Y-center	1	ALL
6	30693-58000....	WASHER	1	ALL
7	00921-21230....	PIN-cotter	1	ALL
8	08120-62033....	BOLT-with lock washer	4	ALL
9	36541-E4101....	ROD ASS'Y-hand brake front	1	ALL
10	36425-04100....	PIN-swing, hand brake arm	1	ALL
	36425-E8700....	PIN-swing, hand brake arm	1	ALL
11	36437-18000....	NUT-adjusting	1	ALL
12	08911-10610....	NUT	1	ALL
13	00922-11210....	RING-snap	1	ALL
14	00840-81810....	PIN-clevis	1	ALL
15	00921-22210....	PIN-split cotter	1	ALL
16	36546-E4100....	CLEVIS-hand brake cable	1	ALL
17	00840-81810....	PIN-clevis	1	ALL

1974, 3

FIG. 229 NISSAN MOTOR CO. LTD.

KEY No	PART NO	PART NAME	QTY	MODELS
18	00921–22210....	PIN-split cotter	1	ALL
19	08913–10610....	NUT-square	1	ALL
20	08911–10610....	NUT	1	ALL
21	36217–E4100....	BOLT-hand brake	1	ALL
22	36518–E4100....	EQUALIZER-hand brake	1	ALL
23	36519–E4100....	PIN-trunnion, hand brake equalizer	1	ALL
24	36515–E4100....	SPRING-return	1	ALL
25	36543–E4101....	CABLE ASS'Y-hand brake, rear	1	ALL
	36543–N3000....	CABLE ASS'Y-hand brake, rear (from '73 model)	1	ALL
26	36516–E4102....	SPRING ASS'Y-hanger	2	ALL
	36516–N3000....	SPRING ASS'Y-hanger (from '73 model)	2	ALL
27	00840-81610....	PIN-clevis	2	ALL
28	00921–21810....	PIN-split cotter	2	ALL
29	36406–E4100....	*RETAINER-hand brake cable	4	ALL
	36406-32200で対応.			
30	36534–E4100....	BRACKET-hand brake cable	2	ALL
31	08120–61462....	BOLT-with lock washer	4	ALL
32	74980–E4101....	COVER ASS'Y-hand brake lever	1	ALL
	74980–E8700....	COVER ASS'Y-hand brake lever (from '72-8)	1	ALL

NOTE

●エレファント　フォーミュラ

国際ラリーやレースにおける輝かしい実績と豊富な経験を活かして開発に成功した高性能車用の画期的なモーターオイルです。

エレファント モーターオイル

日産純正

FIG. 230 NISSAN MOTOR CO. LTD

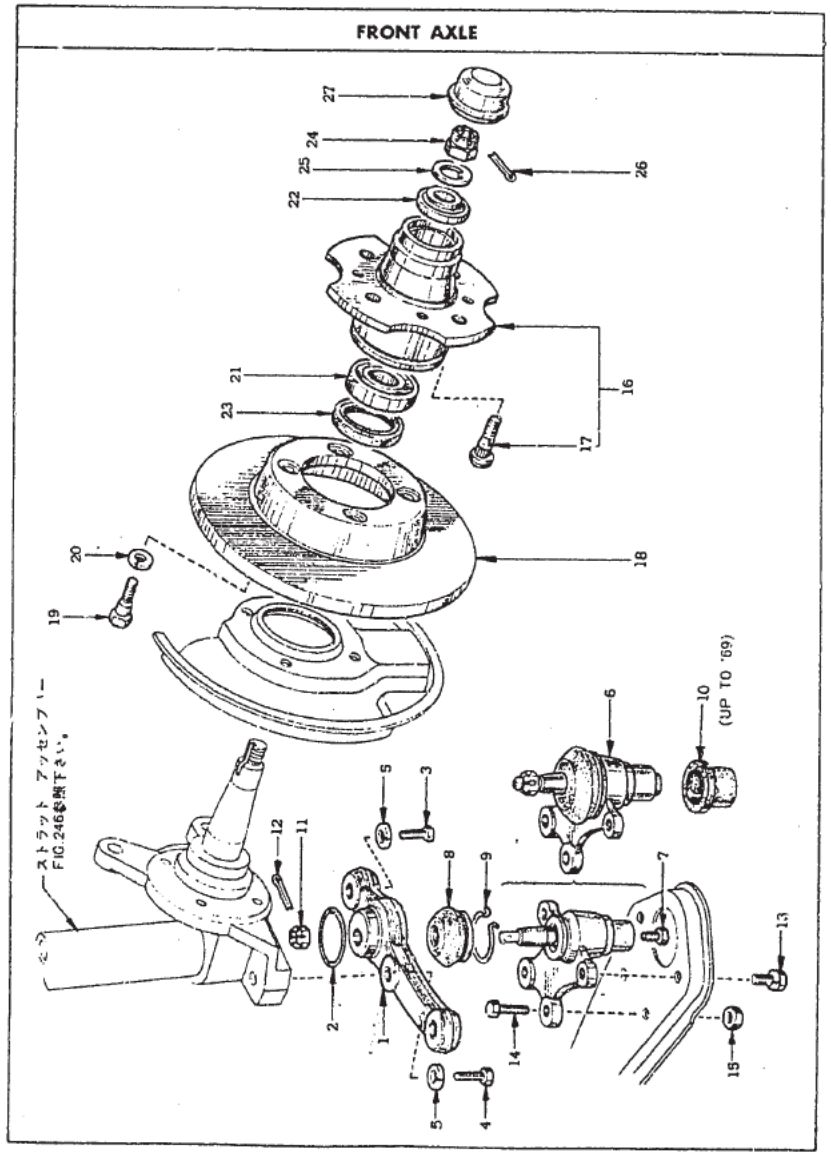

KEY No	PART NO	PART NAME	QTY	MODELS
		FRONT AXLE		
1	40052−E4101....	ARM-knuckle (R.H.)	1	L20, S20
	40053−E4101....	ARM-knuckle (L.H.)	1	L20, S20 ALL
	40052−E4102....	*ARM-knuckle (R.H.) (from '71 model) (回転半径115mm) from 71 model	1	ALL
	40053−E4102....	*ARM-knuckle (L.H.) (from '71 model)	1	ALL
(1)	40052−E4201....	ARM-knuckle (R.H.)	1	(op.)L20,S20
	40053−E4201....	ARM-knuckle (R.H.)	1	(op.)L20,S20
	40052−E4202....	*ARM-knuckle (R.H.) (from '71 model) (回転半径105mm) from 71 model	1	(op.) ALL exc.PZ,ZSA イヂヰ
	40053−E4202....	*ARM-knuckle (L.H.) (from '71 model)	1	(op.) ALL exc.PZ,ZSA イヂヰ
		☆印互換性はボールジョイト(40160-A8600)とセットで使用可能です。		
2	40054−E4100....	"O" RING-knuckle arm	2	ALL
3	40056−21001....	BOLT-knuckle arm	2	ALL
4	40057−21001....	BOLT-knuckle arm	2	ALL
5	08915−24210....	WASHER-lock	4	ALL
6	40160−78500....	BALL JOINT ASS'Y-front suspension	2	L20,S20 左右であり ☆
	40160−A3405....	BALL JOINT ASS'Y-front suspension	2	L20,S20 ☆
	40160−A8600....	BALL JOINT ASS'Y-front suspension	2	ALL ☆
		☆印互換性はナックル アームとセット交換により使用可能です。		
7	40189−73000....	PLUG-filler	2	ALL

1974, 3

FIG. 230 NISSAN MOTOR CO LTD.

KEY No	PART NO	PART NAME	QTY	MODELS
8	40192–21000....	COVER-dust, lower ball joint inner	2	L20, S20 ×1
	40192–A8600....	COVER-dust, lower ball joint inner (from '70-4)	2	ALL ×2
9	40196–21000....	CLAMP-dust cover, ball joint lower	2	ALL
10	40198–21000....	COVER-dust, lower ball joint outer (up to '69)	2	L20, S20
11	08911–04210....	NUT-slotted	2	L20, S20 △1
	40179–A4600....	NUT-slotted	2	L20, S20 △1
	40179–A8600....	NUT-slotted	2	ALL △2
12	08921–32010....	PIN-cotter	2	ALL
13	08130–82065....	BOLT-with washer	4	ALL
14	08134–04510....	BOLT	4	ALL
15	08912–44010....	NUT	4	ALL

FRONT HUB & DRUM

16	40202–E4100....	**HUB ASS'Y-road wheel front**	2	ALL
17	40222–22001....	BOLT-hub	8	ALL
18	40206–E4100....	ROTOR-disc brake front	2	ALL ○1
	40206–E4101....	ROTOR-disc brake front (from '70-5)	2	ALL ○2
19	40209–22000....	BOLT-rotor	8	ALL
20	08915–14010....	WASHER-lock	8	ALL
21	40210–A0100....	BEARING ASS'Y-front wheel inner	2	ALL

NISSAN MOTOR CO LTD FIG. 230

KEY No.	PART NO	PART NAME	QTY	MODELS
22	40215–A0100....	BEARING ASS'Y-front wheel outer	2	ALL
23	40232–A0101....	SEAL-grease, front hub	2	ALL
24	40262–A0100....	NUT-lock, wheel bearing	2	ALL
25	40264–A0100....	WASHER-wheel bearing	2	ALL △1
	40264–E4100....	WASHER-wheel bearing (from '70-8)	2	ALL △2
26	00921–43510....	PIN-cotter	2	ALL
27	40234–E4100....	CAP-hub, front wheel	2	ALL

FIG. 231 NISSAN MOTOR CO., LTD

ROAD WHEEL

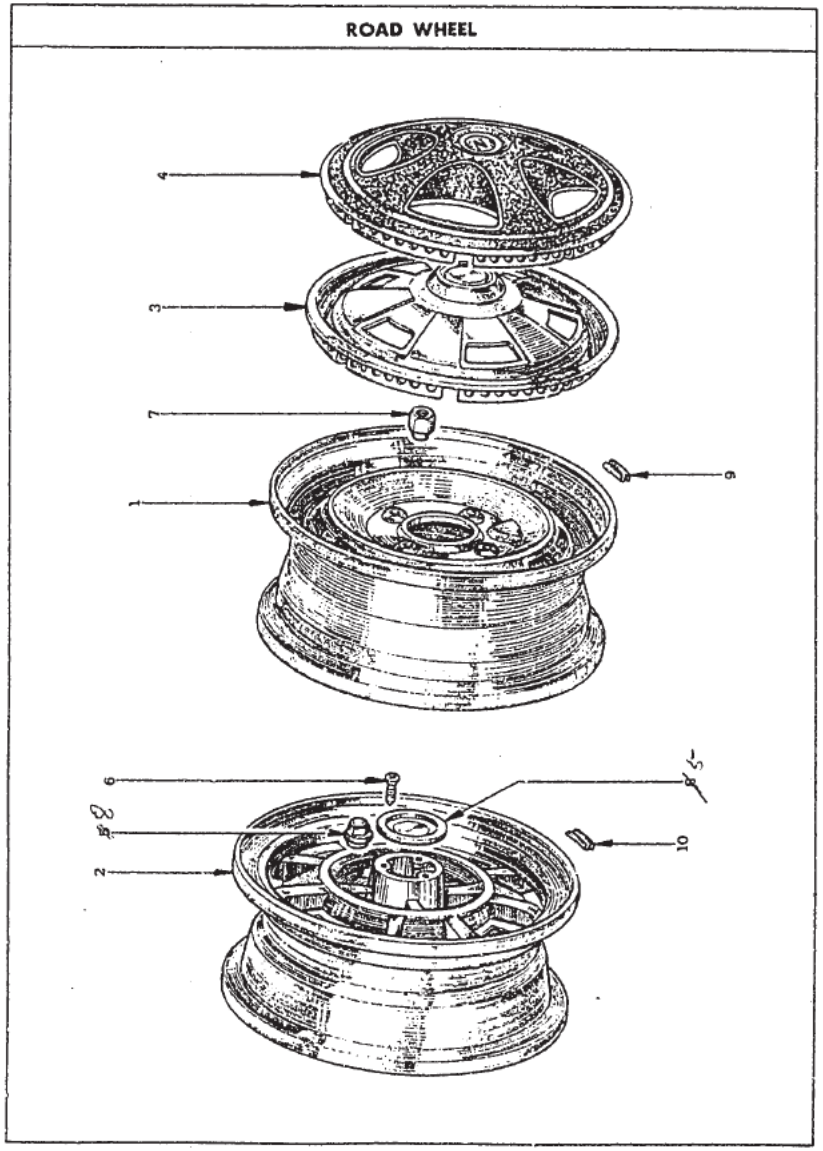

KEY No.	PART NO.	PART NAME	QTY	MODELS
		ROAD WHEEL		
1	ⓐ40300–E4100....	WHEEL ASS'Y-front road (4½-J x 14)	5	L20
(1)	ⓐ40300–E4400....	WHEEL ASS'Y-front road (5-J x 14)	5	L24
2	40300–E4200....	WHEEL ASS'Y-front road (magnesium)(5½-J x 14)	5	PZ
3	ⓐ40315–E4105....	COVER ASS'Y-road wheel	4	ZL, ZA
	ⓐ40315–E4106....	COVER ASS'Y-road wheel (from '72-1)	4	ZL,PZ (op.) ZA
4	ⓐ40315–E8800....	COVER ASS'Y-road wheel	4	HZ,HZA,HZG HZGA
5	ⓐ40343–E4200....	*ORNAMENT-road wheel (magnesium)	4	PZ(op.)ALL
6	40347–E4200....	*SCREW-ornament	12	PZ(op.)ALL
7	40224–21001....	NUT-road wheel	16	ZL,PZ,HZG HZGA(op.)ZA
8	40224–E4200....	*NUT-road wheel	16	PZ(op.)ALL
(8)	40224–A0200....	NUT-road wheel	16	Z-std
	PAINT-03030....	*PAINT-magnesium wheel	1/12	PZ(op.)ALL

1974. 3

FIG. 231 NISSAN MOTOR CO., LTD.

KEY No.	PART NO	PART NAME	QTY	MODELS

BALANCE WEIGHT

9 40321–32200.... WEIGHT-balance, road wheel (10g) ..... as req. L20, L24 ┐
20130–0410P.... WEIGHT-balance, road wheel (10g) (from '72-8) ..... as req. ALL ┘ ○

Other weight

40322–32200 (20g)	40325–32200 (50g)	40328–32200 (80g)	} ┐
40323–32200 (30g)	40326–32200 (60g)	40329–32200 (90g)	} ○
40324–32200 (40g)	40327–32200 (70g)	40330–32200 (100g)	} ┘
20130–0411P (20g)	20130–0414P (50g)		┐
20130–0412P (30g)	20130–0415P (60g)		○
20130–0413P (40g)		(from '72-8)	┘

10 40321–E4200.... *WEIGHT-balance, road wheel (10g) ..... as req. PZ(op.)ALL

Other weight

40322–E4200 (20g)	40325–E4200 (50g)	40328–E4200 (80g)
40323–E4200 (30g)	40326–E4200 (60g)	40329–E4200 (90g)
40324–E4200 (40g)	40327–E4200 (70g)	40330–E4200 (100g)

NOTE

●エレファント　スーパーPCV

耐摩耗性がすぐれているので、いつまでも良好なエンジン性能が維持されしかも燃費を節約できます。

エレファント
モーターオイル
日産純正

1974, 3

FRONT DISC BRAKE

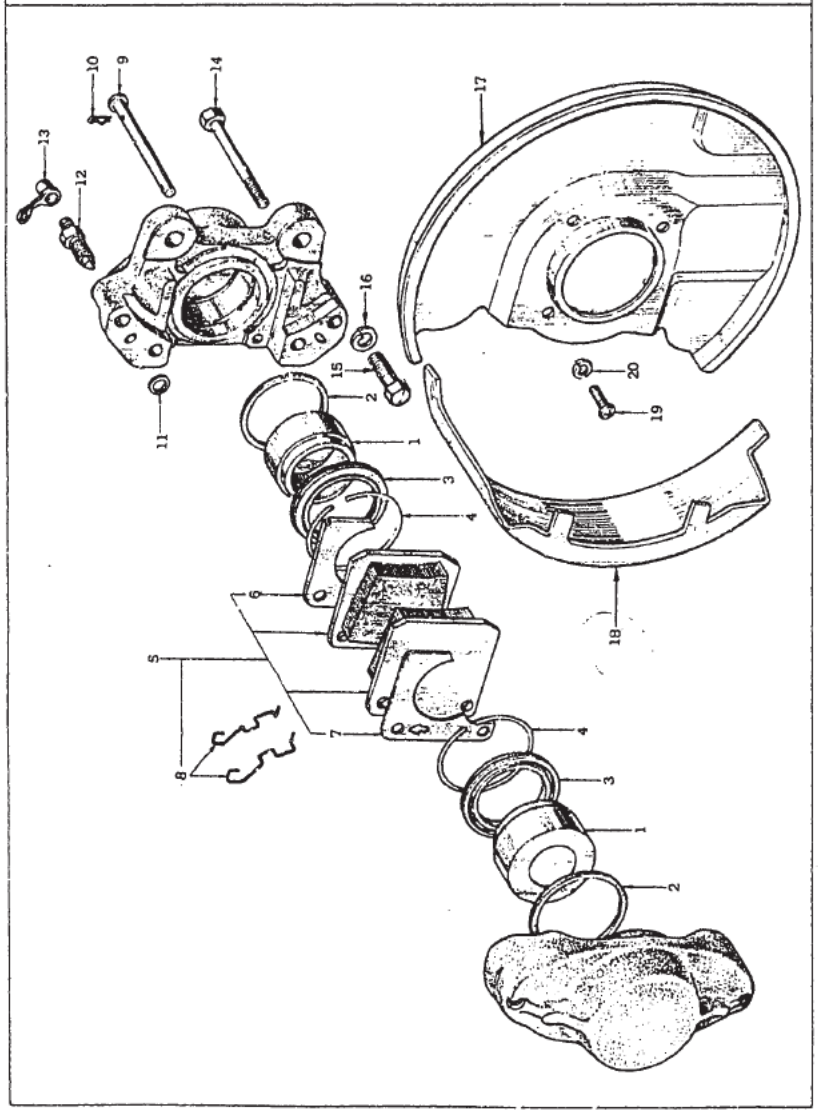

KEY No.	PART NO.	PART NAME	QTY	MODEL
		FRONT DISC BRAKE		
	41000-E4100....	**CALIPER ASS'Y-front brake (R.H.)**	1	ALL △ ※注1
	41000-N3001....	**CALIPER ASS'Y-front brake (R.H.)(from '72-11)**	1	ALL △ ※注1
	41010-E4100....	**CALIPER ASS'Y-front brake (L.H.)**	1	ALL △ ※注1
	41010-N3001....	**CALIPER ASS'Y-front brake (L.H.)(from '72-11)**	1	ALL △ ※注1
1	41120-E4100....	PISTON-cylinder	4	ALL
2	41124-E4100....	SEAL-piston	4	ALL
3	41127-E4100....	SEAL-dust	4	ALL
4	41135-E4100....	RING-retaining	4	ALL
5	41060-E4125....	**PAD KIT-brake**	4	ALL
	41060-N3025....	**PAD KIT-brake** (from '72-11)	4	ALL △ 注2.
	41060-N3026....	**PAD KIT-brake** (from '72-11)	4	(op.) ALL △ 注2.
6	41084-E4100....	SHIM-pad, anti squeak	2	ALL
7	41085-E4100....	SHIM-pad, anti squeak	2	ALL
8	41083-E4100....	SPRING-damping	4	ALL
9	41117-E4100....	PIN	4	ALL
10	41118-E4100....	CLIP	4	ALL
11	41109-84000....	SEAL-caliper	4	ALL

注1. ※印部品は左右SET交換の場合のみの互換性です。
注2. PADKIT-brake 41060-N3025と41060-N3026は共に互換性が有ります。

1974. 3

FIG. 232 NISSAN MOTOR CO. LTD.

KEY No.	PART NO.	PART NAME	QTY	MODELS
12	41128–E4100....	SCREW-bleeder	2	ALL ┐ ○ ┘
	41128–E4101....	SCREW-bleeder	2	ALL
13	41129–30001....	CAP-bleeder screw	2	ALL
14	41218–E4100....	BOLT-bridge	8	ALL
15	41250–E4100....	BOLT-caliper	4	ALL
16	08915–24210....	WASHER-lock	4	ALL
17	41151–E4100....	PLATE-baffle front (R.H.)	1	L20, S20 ┐ △ ┘
	41151–E4102....	PLATE-baffle front (R.H.) (from C/#S30-02865, PS30-00316)	1	ALL
	41161–E4100....	PLATE-baffle front (L.H.)	1	ALL ┐ △ ┘
	41161–E4102....	PLATE-baffle front (L.H.)	1	ALL
18	41152–E4100....	COVER-plate baffle front (R.H.)	1	(op.) ALL
	41162–E4100....	COVER-plate baffle front (L.H.)	1	(op.) ALL
19	08310–61012....	SCREW	8	ALL ┐ △ ┘
	43244–A0800....	SCREW	8	ALL
20	08915–13610....	WASHER-lock (up to '72)	8	ALL

NOTE

●エレファント　スーパーPCV

スラッジやワニスの堆積を防止する能力はずばぬけておりエンジン内部をきれいに保ちます。低温スラッジでオイルの通路を閉鎖することもありません。

日産純正 エレファント モーターオイル

REAR BRAKE

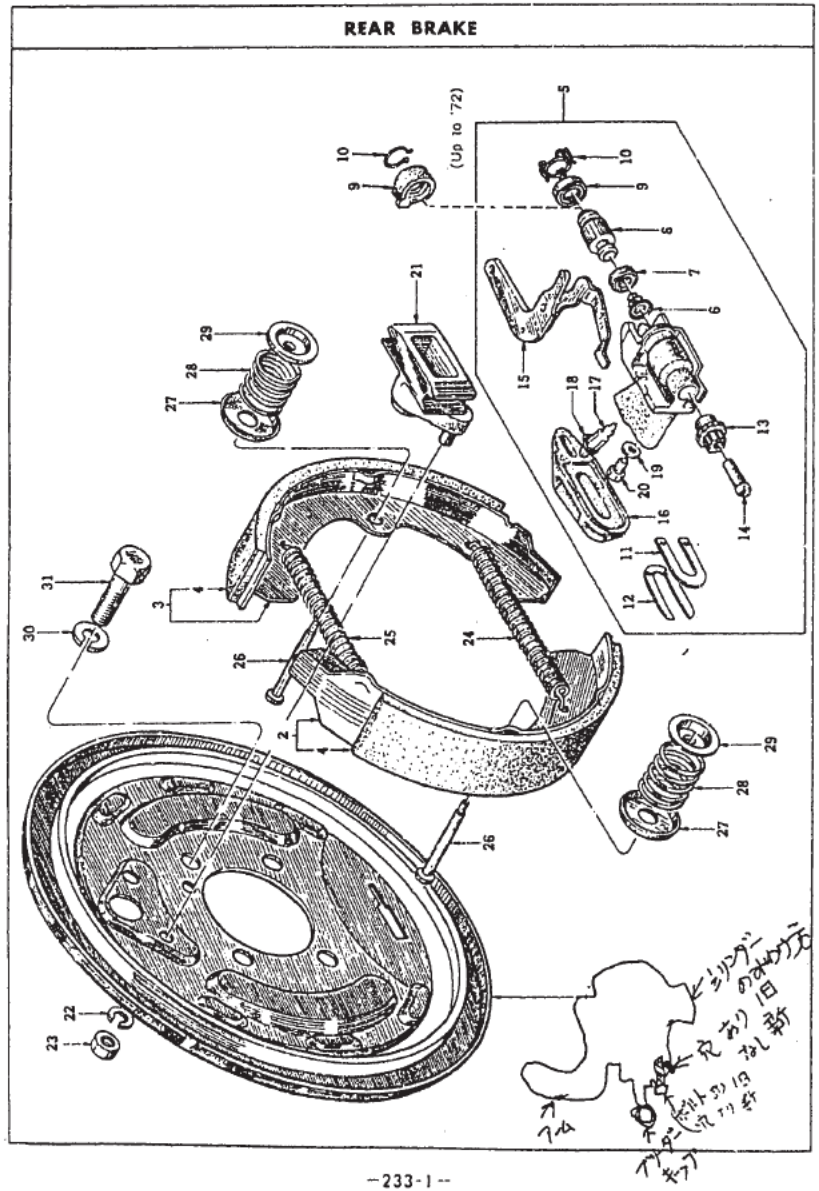

オートアジャスター方式に変更。

REAR BRAKE

KEY No	PART NO	PART NAME	QTY	MODELS
	44000-E4100....	BRAKE ASS'Y-rear (R.H.)	1	ALL ┐ × ┘ △※注1
	44000-E8700....	BRAKE ASS'Y-rear (R.H.)(from '72-7)	1	ALL
	44000-N3001....	BRAKE ASS'Y-rear (R.H.)(from '72-11)	1	ALL
	44010-E4100....	BRAKE ASS'Y-rear (L.H.)	1	ALL ┐ × ┘ △※注1
	44010-E8700....	BRAKE ASS'Y-rear (L.H.)(from '72-7)	1	ALL
	44010-N3001....	BRAKE ASS'Y-rear (L.H.)(from '72-11)	1	ALL
1	44020-E4100....	DISC ASS'Y-rear brake (R.H.)	1	ALL ┐ × ┘
	44020-E8700....	DISC ASS'Y-rear brake (R.H.)(from '72-7)	1	ALL
	44030-E4100....	DISC ASS'Y-rear brake (L.H.)	1	ALL ┐ × ┘
	44030-E8700....	DISC ASS'Y-rear brake (L.H.)(from '72-7)	1	ALL
2	44060-E4100....	SHOE ASS'Y-rear brake fore	2	ALL
3	44070-E4100....	SHOE ASS'Y-rear brake after	2	ALL
4	41066-21005....	LINING-brake	4	ALL
5	44100-E4100....	CYLINDER ASS'Y-rear wheel (R.H.)	1	ALL ┐ × ┘ △
	44100-E8700....	CYLINDER ASS'Y-rear wheel (R.H.)(from '72-7)	1	ALL
	44100-N3001....	CYLINDER ASS'Y-rear wheel (R.H.)(from '72-11)	1	ALL
	44101-E4100....	CYLINDER ASS'Y-rear wheel (L.H.)	1	ALL ┐ × ┘
	44101-E8700....	CYLINDER ASS'Y-rear wheel (L.H.)(from '72-7)	1	ALL

注1. ※印部品は左右SET交換の場合のみの互換性です。

1974, 3

FIG. 233 NISSAN MOTOR CO., LTD.

KEY No	PART NO	PART NAME	QTY	MODELS
	44101–N3001....	**CYLINDER ASS'Y-rear wheel (L.H.)(from '72-11)**	1	ALL △
6	44125–68200....	SPRING	2	ALL
7	44112–30001....	CUP-piston	2	ALL
8	44108–E4110....	PISTON-cylinder	2	ALL
	44124–E0210....	COVER-dust	2	ALL ┐
9	44144–U4010.... *	COVER-dust (from '72-10)	2	ALL ×
	44113–31710....	RING-snap	2	ALL ┐
10	44113–U4010.... *	RETAINER (from '72-10)	2	ALL ×
11	44141–E0210....	PLATE-adjuster	2	ALL
12	44149–E0210....	PLATE-lock	2	ALL
13	44152–E0210....	ADJUSTER (R.H.)	1	ALL
	44153–E0210....	ADJUSTER (L.H.)	1	ALL
14	44154–E4110....	SCREW-adjuster (R.H.)	1	ALL
	44155–E4110....	SCREW-adjuster (L.H.)	1	ALL
15	44118–E4110....	LEVER (R.H.)	1	ALL
	44119–E4110....	LEVER (L.H.)	1	ALL
16	44144–E0210.... *	COVER-dust	2	ALL
17	44128–E4110....	SCREW-bleeder	2	ALL
18	41129–30001....	CAP-bleeder screw	2	ALL
19	46079–10610....	PACKING-stopper screw	2	ALL

KEY No.	PART NO	PART NAME	QTY	MODELS
20	46070–28511....	STOPPER	2	ALL
21	44200–E4100....	BLOCK ASS'Y-anchor	2	ALL
22	08915–13810....	WASHER-lock	4	ALL
23	08911–10810....	NUT	4	ALL
24	44090–E4100.... *	SPRING-return, brake cylinder side	2	ALL
25	44091–21010....	SPRING-return, brake anchor side	2	ALL
26	44081–73000....	PIN-anti shoe rattle	4	ALL
27	44082–32200....	SEAT-spring,anti shoe rattle	4	ALL
28	44083–21010....	SPRING-anti shoe rattle	4	ALL
29	44084–32201....	RETAINER-spring	4	ALL
30	08915–14010....	WASHER-lock	8	ALL
31	08124–01610....	BOLT	8	ALL
	44100–E4127....	**REPAIR KIT-wheel cylinder "A"**	(1)	ALL
(7)	44112–30001....	CUP-piston	1	ALL
(9)	44124–E0210....	COVER-dust	1	ALL
(10)	44113–31710....	RING-snap	1	ALL
(16)	44144–E4110....	COVER-dust	1	ALL
(18)	41129–30001....	CAP-bleeder screw	1	ALL
	44100–E4128....	**REPAIR KIT-wheel cylinder "B"**	(1)	ALL
	44100–E4127....	REPAIR KIT-wheel cylinder "A"	1	ALL

1974. 3

FIG. 233 NISSAN MOTOR CO., LTD.

KEY No	PART NO.	PART NAME	QTY	MODELS
(8)	44108-E4110....	PISTON-cylinder	1	ALL

NOTE

●エレファント　スーパーデラックス

ドロドロした低温スラッジがオイルの通路をふさぐ心配がないので信号待ちの多い市街地を走る場合でも快調です。

エレファント
モーターオイル
日産純正

FIG. 234 NISSAN MOTOR CO., LTD.

REAR AXLE & SHAFT

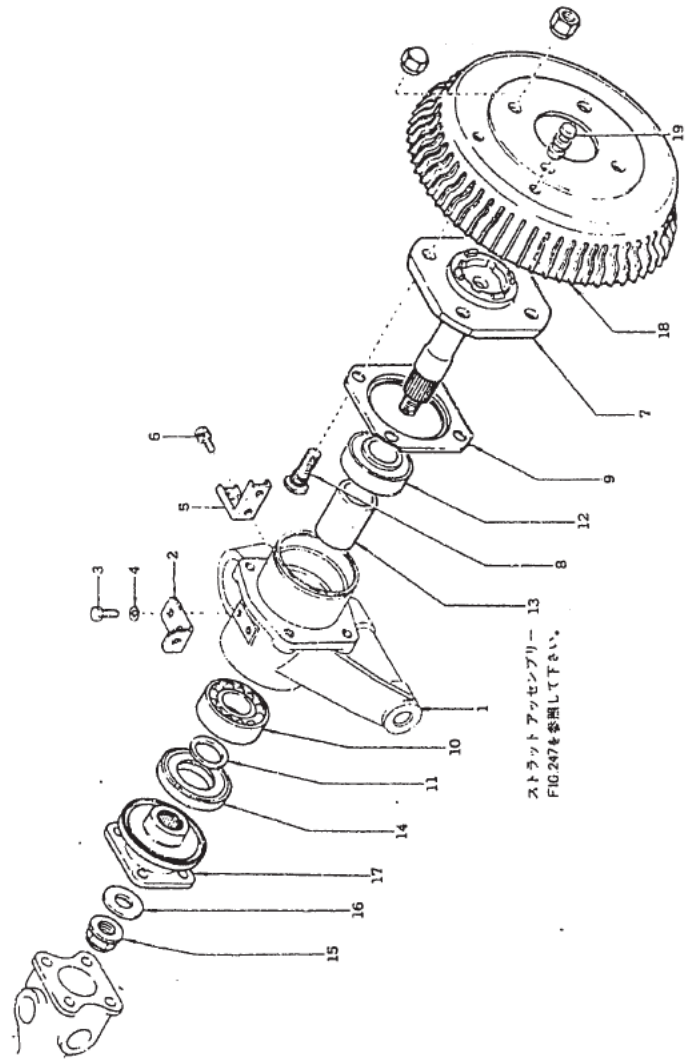

NISSAN MOTOR CO. LTD. FIG. 234

KEY No	PART NO	PART NAME	QTY	MODELS
		REAR AXLE		
1	★43014−E4100....	HOUSING-rear brake (R.H.)	1	ALL
	★43015−E4100....	HOUSING-rear brake (L.H.)	1	ALL
2	46325−E4100....	BRACKET-hose rear brake	2	ALL
3	08120−61010....	BOLT	4	ALL
4	08915−13610....	WASHER-lock	4	ALL
5	36534−E4100....	BRACKET-rear cable, hand brake	2	ALL
6	08120−61462....	BOLT-with lock washer	4	ALL
7	38164−E4150....	**SHAFT ASS'Y-rear axle**	2	ALL
8	40222−A0800....	BOLT-hub	8	ALL
9	43242−E4100....	CATCHER-grease, rear wheel bearing	2	ALL
10	43210−E4100....	BEARING-rear wheel inner	2	ALL
11	43211−E4100....	WASHER-bearing (from C/# S30-04360)	2	ALL
12	43215−E4100....	BEARING-rear wheel outer	2	ALL
13	43090−E4100....	PIECE-distance (52.43mm)	2	ALL
	43091−E4100....	PIECE-distance (52.53mm)		
	43092−E4100....	PIECE-distance (52.63mm)		
14	43232−E4100....	SEAL-grease, rear axle	2	ALL
15	43262−21000....	NUT-lock, rear wheel bearing	2	ALL

1974. 3

FIG. 234 NISSAN MOTOR CO. LTD.

KEY No.	PART NO	PART NAME	QTY	MODELS
16	08915–45010....	WASHER-lock	2	ALL
17	43213–E4100....	FLANGE ASS'Y-companion	2	ALL
18	43206–E4100....	*DRUM-rear brake	2	ALL
19	43208–E4100....	*PLUG-adjusting hole, brake drum	2	ALL

NOTE

●エレファント　スーパーPCV

PCV装置によって発生しやすくなったサビや汚れを完全に抑制する高度の特性を備えた新時代のオイルです。

エレファント
モーターオイル
日産純正

FIG. 235-A NISSAN MOTOR CO., LTD.

BRAKE & CLUTCH PEDAL (M-ALL)

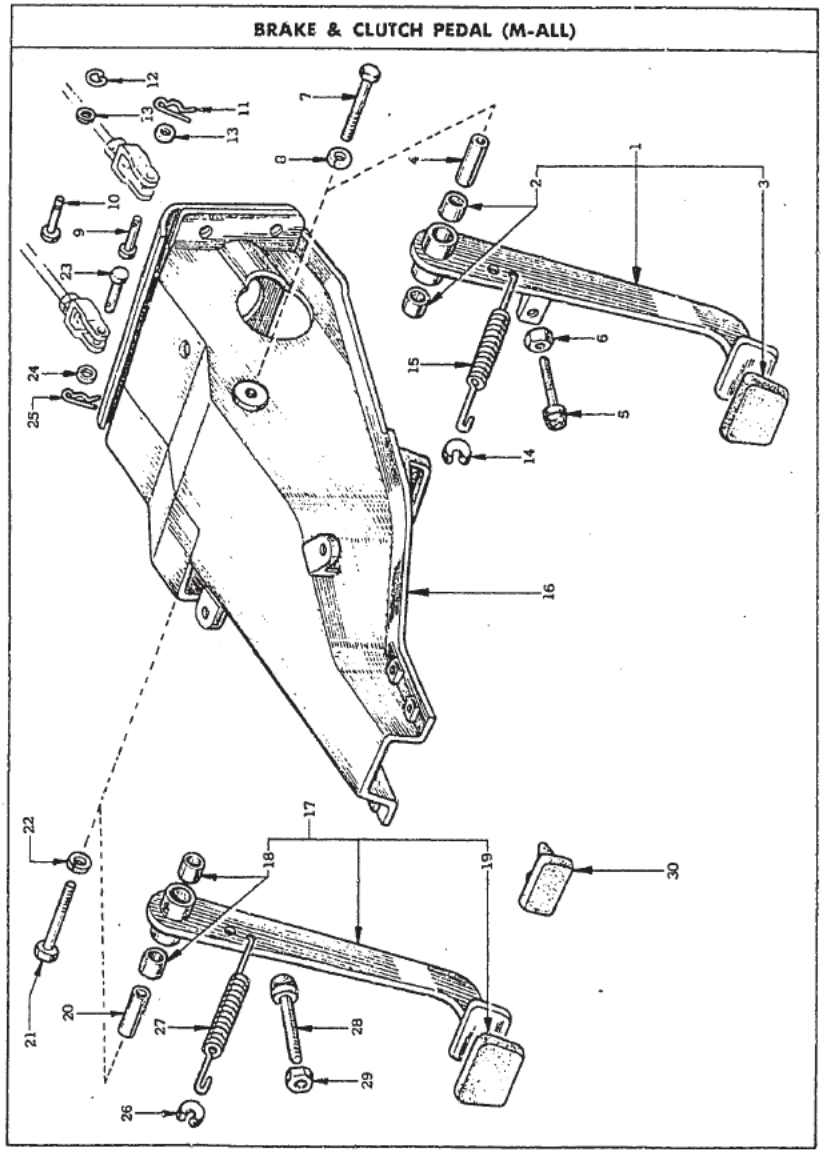

NISSAN MOTOR CO. LTD FIG. 235-A

KEY No	PART NO	PART NAME	QTY	MODELS
		BRAKE PEDAL		
1	46520-E4300....	**PEDAL ASS'Y-brake** (マスターバック付)	1	ZS,ZL,PZ
	46520-E8700....	**PEDAL ASS'Y-brake** (マスターバック付) **(from '72 model)**	1	M-all (exc. PZR)
	46520-N3000....	**PEDAL ASS'Y-brake** (マスターバック付) **(from C/# S30-100001, HS30-014001)**	1	M-all (exc. PZR)
(1)	46520-E4100....	**PEDAL ASS'Y-brake** (マスターバック無) **(up to '72 model)**	1	PZR
2	46525-73000....	BUSH-pedal	2	M-all
3	46531-10601....	COVER-pedal	1	M-all
	46531-78500....	COVER-pedal (from '72 model)	1	M-all
4	46582-21000....	SLEEVE-pedal shaft	1	M-all
5	46518-21000....	STOPPER ASS'Y-pedal	1	M-all
6	08911-30810....	NUT-lock	1	M-all
7	46561-21000....	PIN-fulcrum	1	M-all
8	08916-14210....	WASHER-lock	1	M-all
9	46123-E4600....	PIN-clevis	1	M-all (exc. PZR)
	46123-E8200....	PIN-clevis (from '71-6)	1	M-all (exc. PZR)
(9)	46123-08700....	PIN-clevis	1	PZR
	46123-E8210....	PIN-clevis (from '71-6)	1	PZR
10	46123-E7300....	PIN-clevis (from '72 model)	1	M-all

1974, 3

FIG. 235-A NISSAN MOTOR CO., LTD.

KEY No	PART NO	PART NAME	QTY	MODELS
11	46124–35100....	RETAINER-spring	1	M-all △
12	01532–00031....	RING-snap	1	M-all △
13	18019–15800....	WASHER-plain	1	M-all
14	46488–21000....	SEAT-return spring	1	M-all
15	46587–E4100....	SPRING-return	1	M-all
16	48318–E4100....	BRACKET ASS'Y-pedal & steering post	1	M-all △
	48318–E8700....	BRACKET ASS'Y-pedal & steering post	1	M-all △ ×
	48318–N3000....	BRACKET ASS'Y-pedal & steering post (from '73 model)	1	M-all ×

CLUTCH PEDAL (exc. A-all)

17	46540–E4100....	**PEDAL ASS'Y-clutch**	1	M-all ×
	46540–N3000....	**PEDAL ASS'Y-clutch (from '73 model)**	1	M-all ×
18	46525–73000....	BUSH-pedal	1	M-all
19	46531–10601....	COVER-pedal	1	M-all ○
	46531–78500....	COVER-pedal	1	M-all ○
20	46582–21000....	SLEEVE-pedal shaft	1	M-all
21	46561–21000....	PIN-fulcrum (R.H.) thread	1	M-all
22	08916–14210....	WASHER-lock	1	M-all

KEY No	PART NO	PART NAME	QTY	MODELS
23	46123–08700....	PIN-clevis	1	L24,S20 △
	46123–34500....	PIN-clevis	1	L20 △
	46123–E7300....	PIN-clevis (from '72-8)	1	M-all △
24	18019–15800....	WASHER-plain	1	M-all
25	46124–35100....	RETAINER-spring	1	M-all △
	01532–00031....	RETAINER-spring (from '72-8)	1	M-all △
26	46488–21000....	SEAT-return spring	1	M-all
27	46587–E4100....	SPRING-return, clutch pedal	1	M-all
28	46518–21000....	STOPPER ASS'Y-pedal	1	M-all
29	08911–30810....	NUT-lock	1	M-all
30	46570–E4102....	BUMPER-clutch pedal	1	M-all

FIG. 235-B NISSAN MOTOR CO., LTD.

BRAKE PEDAL (A-ALL)

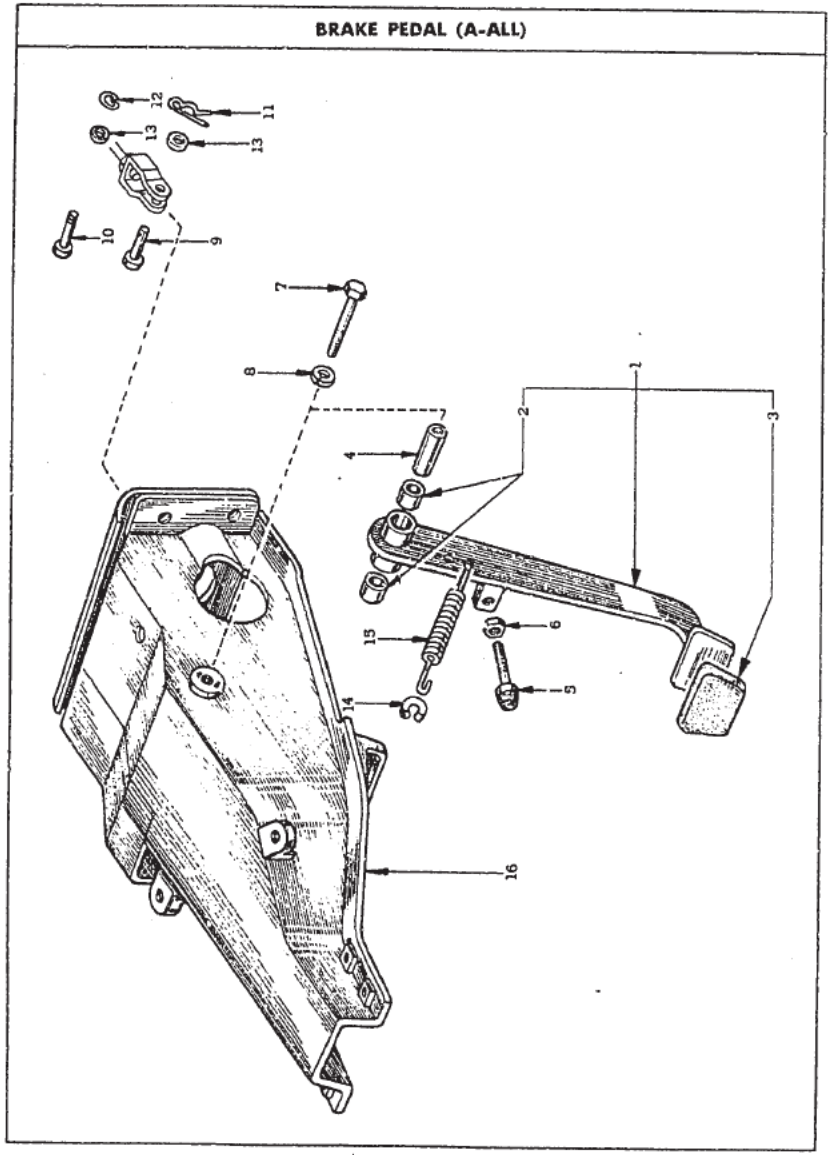

NISSAN MOTOR CO., LTD. FIG. 235-B

KEY No.	PART NO	PART NAME	QTY	MODELS

BRAKE PEDAL (exc. M-all)

1	46520-E4500....	PEDAL ASS'Y-brake (マスターバック付)	1	ZA
	46520-E8720....	PEDAL ASS'Y-brake (マスターバック付) (from '72 model)	1	A-all
	46520-N3020....	PEDAL ASS'Y-brake (マスターバック付) (from C/# S30-100001, HS30-014001)	1	A-all
2	46525-73000....	BUSH-pedal	2	A-all
3	46531-11700....	COVER-pedal	1	A-all
4	46582-21000....	SLEEVE-pedal shaft	1	A-all
5	46518-21000....	STOPPER ASS'Y-pedal	1	A-all
6	08911-30810....	NUT-lock	1	A-all
7	46561-21000....	PIN-fulcrum	1	A-all
8	08916-14210....	WASHER-lock	1	A-all
9	46123-E4600....	PIN-clevis	1	A-all
	46123-E8200....	PIN-clevis (from '71-6)	1	A-all
10	46123-E7300....	PIN-clevis (from '72 model)	1	A-all
11	46124-35100....	RETAINER-spring	1	A-all
12	01532-00031....	RING-snap	1	A-all
13	18019-15800....	WASHER-plain	1	A-all
14	46488-21000....	SEAT-return spring	1	A-all
15	46587-E4100....	SPRING-return	1	A-all

1974. 3

F 7

FIG. 235-B NISSAN MOTOR CO. LTD.

KEY No.	PART NO.	PART NAME	QTY	MODELS
16	48318–E4100....	BRACKET ASS'Y-pedal & steering post	1	A-all
	48318–E8700....	BRACKET ASS'Y-pedal & steering post	1	A-all
	48318–N3000....	BRACKET ASS'Y-pedal & steering post ..... (from '73 model)	1	A-all

NOTE

●エレファント　スーパーデラックス

冬期又は寒冷地にてノロノロ運転で発生しがちな錆や腐食からエンジンを守ります。

エレファント
モーターオイル
日産純正

FIG. 236-A NISSAN MOTOR CO., LTD.

BRAKE MASTER CYLINDER

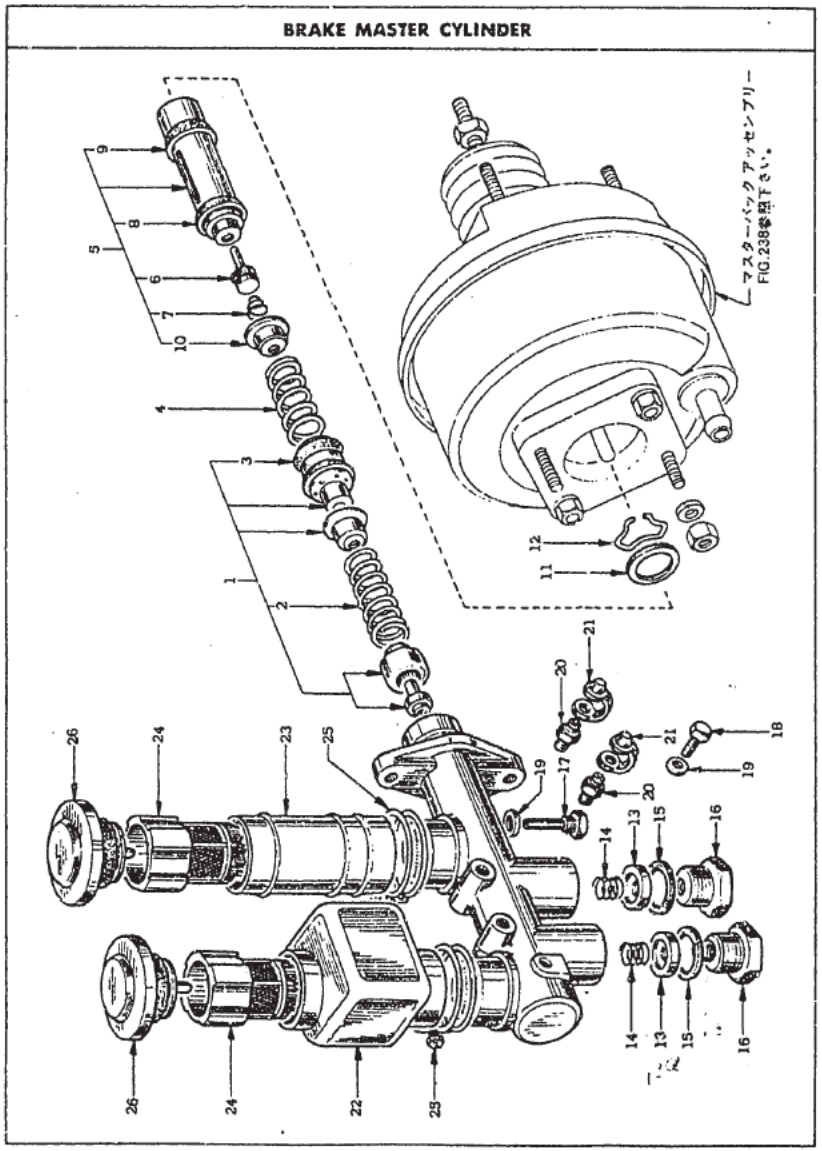

NISSAN MOTOR CO LTD FIG. 236-A

KEY No.	PART NO	PART NAME	QTY	MODELS
		BRAKE MASTER CYLINDER (exc. PZR) (up to '71 model)		
	46010–E4601....	**CYLINDER ASS'Y-tandem brake master**	1	ZL,PZ,ZS
	46010–E4602....	**CYLINDER ASS'Y-tandem brake master**	1	L20, PZ
1	46063–E4610....	**PISTON ASS'Y-cylinder (P)**	1	L20, PZ
2	46056–73010....	SPRING-valve	1	L20, PZ
3	46078–10611....	CUP-piston	2	L20, PZ
4	46075–73010....	SPRING-piston	1	L20, PZ
5	46063–E0211....	**PISTON ASS'Y-cylinder (S)**	1	L20, PZ
6	46073–10610....	VALVE ASS'Y-inlet	1	L20, PZ
7	46056–73010....	SPRING-valve	1	L20, PZ
8	46068–10611....	CUP-piston (S)	1	L20, PZ
9	46078–10611....	CUP-piston (P)	1	L20, PZ
10	46062–73010....	SEAT-spring	1	L20, PZ
11	46072–73010....	STOPPER-piston	1	L20, PZ
12	46071–27260....	RING-stopper	1	L20, PZ
13	46050–73410....	VALVE ASS'Y	2	L20, PZ
14	46027–73010....	SPRING-valve	2	L20, PZ
15	46036–30100....	PACKING	2	L20, PZ
16	28276–0502P....	PLUG-cylinder	2	L20, PZ

1974, 3

FIG. 236-A NISSAN MOTOR CO. LTD

KEY No.	PART NO	PART NAME	QTY	MODELS
17	46070–69010....	SCREW-stopper	1	L20, PZ
18	46070–28511....	SCREW-stopper	1	L20, PZ
19	46079–10610....	PACKING-stopper screw	2	L20, PZ
20	41128–21011....	SCREW-bleeder	2	L20, PZ
21	41129–30001....	CAP-bleeder	2	L20, PZ
22	46090–25510....	RESERVOIR-brake oil	1	L20, PZ ┐
	46090–U0512....	RESERVOIR-brake oil	1	L20, PZ △ ┘
23	46091–E0310....	RESERVOIR-brake oil	1	L20, PZ ┐
	46091–U0512....	RESERVOIR-brake oil	1	L20, PZ △ ┘
24	46093–N0410....	FILTER-oil	2	L20, PZ
25	46016–10610....	BAND ASS'Y-oil reservoir	2	L20, PZ
26	46020–10610....	CAP-oil reservoir	2	L20, PZ
	46010–79227....	REPAIR KIT-master cylinder "A"	2	L20, PZ
	46010–E4628....	REPAIR KIT-master cylinder "B"		

NOTE

●エレファント　フォーミュラ

高温高速運転時の耐久性にすぐれ常に最高の
エンジン性能を発揮でき信頼度は抜群です。

エレファント
モーターオイル
日産純正

BRAKE MASTER CYLINDER

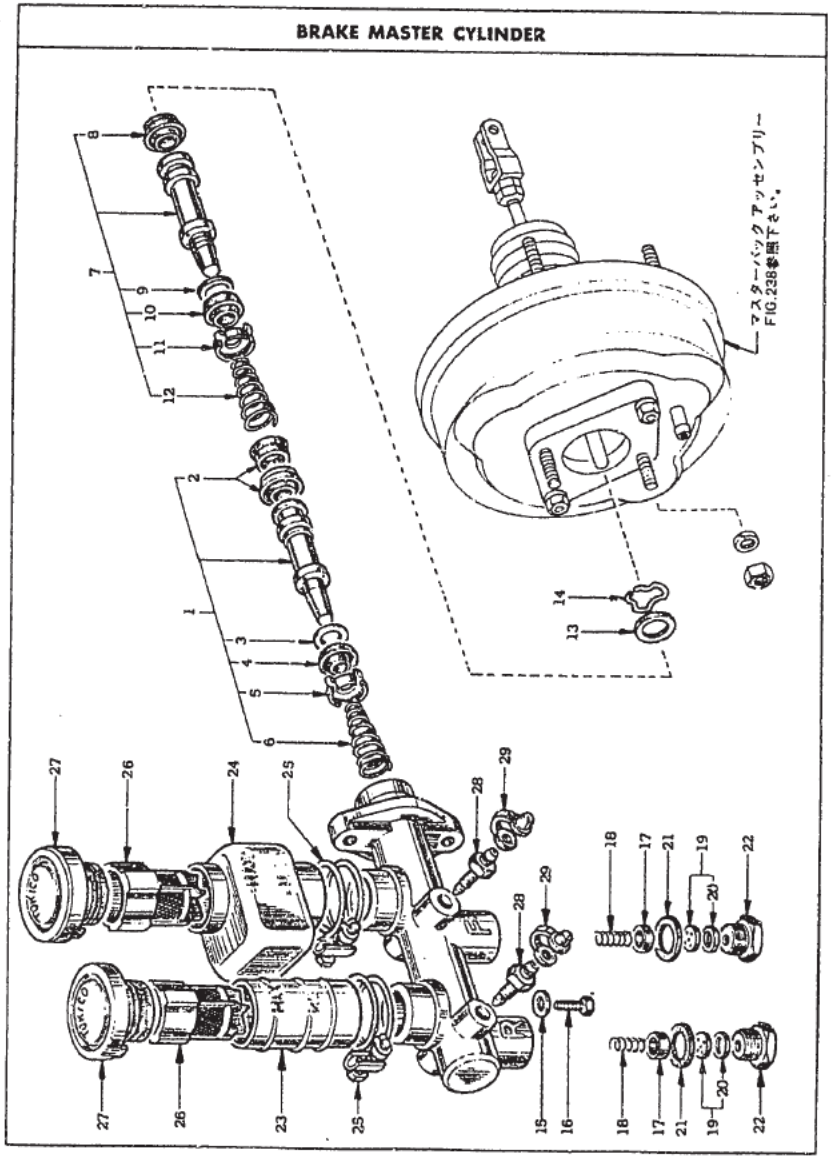

KEY No.	PART NO	PART NAME	QTY	MODELS
		BRAKE MASTER CYLINDER (exc. PZR) (from '72 model)		
	46010–E8701....	**CYLINDER ASS'Y-brake master**	1	ALL(exc.PZR)
1	46073–E8714....	**PISTON ASS'Y-secondary**	1	ALL(exc.PZR)
	46073-E8915	—〃—	1	—〃—
2	46064–E7411....	CUP-piston	2	ALL(exc.PZR)
3	46066–E7411....	SPACER	1	ALL(exc.PZR)
4	46068–E7411....	CUP-piston	1	ALL(exc.PZR)
5	46062–E7411....	SEAT-spring	1	ALL(exc.PZR)
6	46075–E7411....	SPRING-return	1	ALL(exc.PZR)
7	46063–E8713....	**PISTON ASS'Y-primary**	1	ALL(exc.PZR)
	46063-E8914	—〃—	1	—〃—
8	46064–E7411....	CUP-piston	1	ALL(exc.PZR)
9	46066–E7411....	SPACER	1	ALL(exc.PZR)
10	46068–E7411....	CUP-piston	1	ALL(exc.PZR)
11	46062–E7411....	SEAT-spring	1	ALL(exc.PZR)
12	46065–E7411....	SPRING-return	1	ALL(exc.PZR)
13	28221–6401P....	STOPPER-piston	1	ALL(exc.PZR)
14	46071–27260....	RING-piston stopper	1	ALL(exc.PZR)
15	46079–R1200....	GASKET-piston stopper	1	ALL(exc.PZR)
16	46032–R1200....	STOPPER-secondary piston	1	ALL(exc.PZR)
17	46059–69010....	GUIDE-valve	2	ALL(exc.PZR)

FIG. 236-B NISSAN MOTOR CO. LTD.

KEY No	PART NO	PART NAME	QTY	MODELS
18	46027-73010....	SPRING-valve	2	ALL(exc.PZR)
19	46050-73410.... 46050-73010	VALVE ASS'Y-residual (P) (S)	1	ALL(exc.PZR)
✱ 20	46057-73410....	RETAINER-valve	2	ALL(exc.PZR)
21	46036-30100....	PACKING-valve	2	ALL(exc.PZR)
22	28276-0502P....	CAP-valve	2	ALL(exc.PZR)
23	46090-U0512....	RESERVOIR-oil	1	ALL(exc.PZR)
24	46091-U0512....	RESERVOIR-oil	1	ALL(exc.PZR)
25	46016-10610....	BAND-oil reservoir	2	ALL(exc.PZR)
26	46093-N0410....	FILTER-oil	2	ALL(exc.PZR)
27	46020-U0512....	CAP ASS'Y-oil reservoir	2	ALL(exc.PZR)
28	41128-U0512....	SCREW-bleeder	2	ALL(exc.PZR)
29	41129-A2410....	CAP-bleeder screw	2	ALL(exc.PZR)
	46010-E8725....	**REPAIR KIT-master cylinder**	(1)	ALL(exc.PZR)
(2)	46064-E7411....	CUP-piston	2	ALL(exc.PZR)
(4)	46068-E7411....	CUP-piston	1	ALL(exc.PZR)
(14)	46071-27260....	RING-piston stopper	1	ALL(exc.PZR)
(15)	46079-R1200....	GASKET-piston stopper	1	ALL(exc.PZR)
(19)	46050-73410....	VALVE ASS'Y-residual	2	ALL(exc.PZR)
(21)	46036-30100....	PACKING-valve	2	ALL(exc.PZR)
(29)	41129-A2410....	CAP-bleeder screw	2	ALL(exc.PZR)

NOTE

●エレファント　フォーミュラ

国際ラリーやレースにおける輝かしい実績と豊富な経験を活かして開発に成功した高性能車用の画期的なモーターオイルです。

エレファント
モーターオイル
日産純正

1974. 3

FIG. 237-A NISSAN MOTOR CO., LTD.

BRAKE MASTER CYLINDER

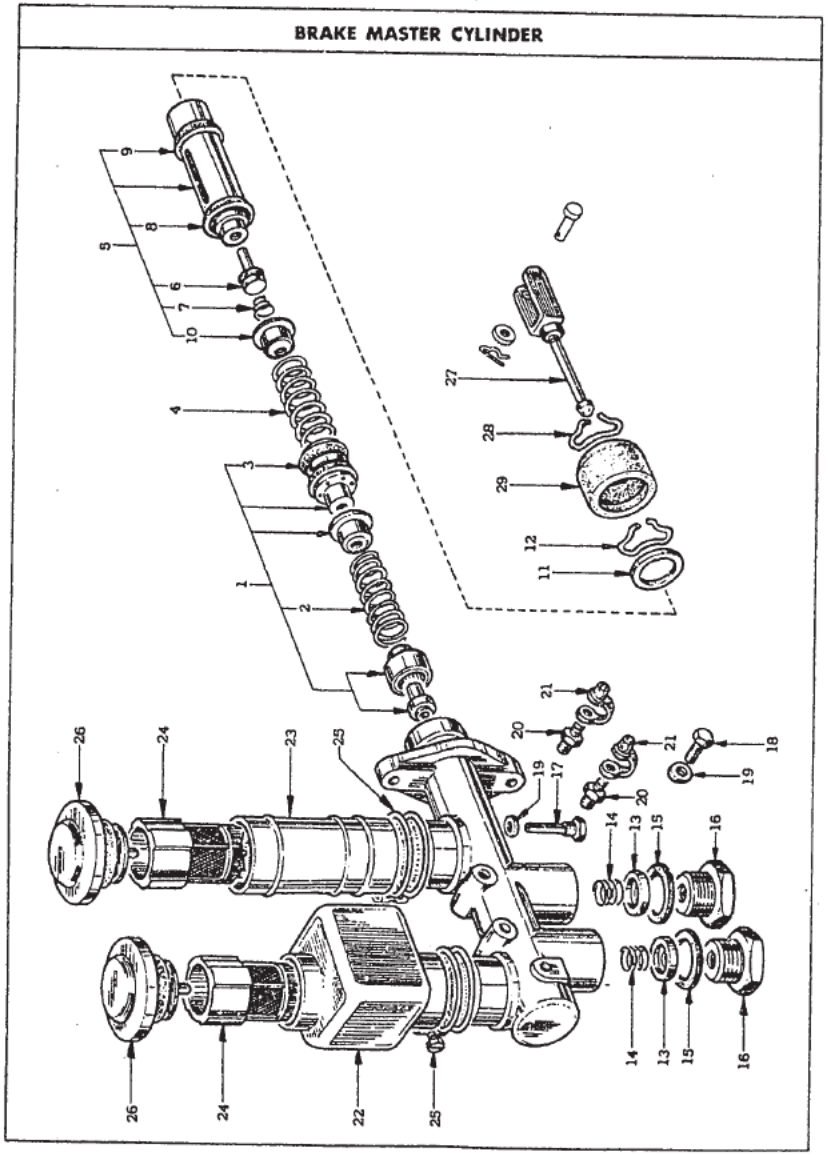

KEY No.	PART NO.	PART NAME	QTY	MODELS
		BRAKE MASTER CYLINDER (PZR) (up to '71 model)		
	46010—E4101....	**CYLINDER ASS'Y-tandem brake master**	1	PZR △
	46010—E4102....	**CYLINDER ASS'Y-tandem brake master**	1	PZR ☆ 注1.
	46010—E4103....	**CYLINDER ASS'Y-tandem brake master**	1	PZR
	注1. ☆印互換性は46123-E8210のピンと同時交換により使用可能です。			
1	46063—E4110....	**PISTON ASS'Y-cylinder (P)**	1	PZR
2	46056—73010....	SPRING-valve	1	PZR
3	46078—61010....	CUP-piston	2	PZR
4	46075—23111....	SPRING-piston	1	PZR
5	46063—23112....	**PISTON ASS'Y-cylinder (S)**	1	PZR
6	46073—10610....	VALVE ASS'Y-inlet	1	PZR
7	46056—73010....	SPRING-valve	1	PZR
8	46068—61010....	CUP-piston (S)	1	PZR
9	46078—61010....	CUP-piston (P)	1	PZR
10	46062—73010....	SEAT-spring	1	PZR
11	46072—73010....	STOPPER-piston	1	PZR
12	46071—27260....	RING-stopper	1	PZR
13	46050—73410....	VALVE ASS'Y	2	PZR
14	46027—73010....	SPRING-valve	2	PZR

1974. 3

FIG. 237-A NISSAN MOTOR CO. LTD.

KEY No	PART NO	PART NAME	QTY	MODELS
15	46036-30100....	PACKING	2	PZR
16	28276-0502P....	PLUG-cylinder	2	PZR
17	46032-10610....	SCREW-stopper	1	PZR
18	46070-28511....	SCREW-stopper	1	PZR
19	46079-10610....	PACKING-stopper screw	2	PZR
20	41128-21011....	SCREW-bleeder	2	PZR
21	41129-30001....	CAP-bleeder	2	PZR
22	46090-25510....	RESERVOIR-brake oil	1	PZR ┐△┘
	46090-U0512....	RESERVOIR-brake oil	1	PZR
23	46091-E0310....	RESERVOIR-brake oil	1	PZR ┐△┘
	46091-U0512....	RESERVOIR-brake oil	1	PZR
24	46093-N0410....	FILTER-oil	2	PZR
25	46016-10610....	BAND ASS'Y-oil reservoir	2	PZR
26	46020-10610....	CAP-oil reservoir	2	PZR
27	46080-E4110....	ROD ASS'Y-push	1	PZR
28	46070-27260....	RING-stopper	1	PZR
29	46100-27260....	COVER-dust	1	PZR
	46010-23127....	REPAIR KIT-master cylinder "A"	(1)	PZR
	46010-E4128....	REPAIR KIT-master cylinder "B"		

NOTE

●エレファント　スーパーPCV

耐摩耗性がすぐれているので、いつまでも良好なエンジン性能が維持されしかも燃費を節約できます。

エレファント
モーターオイル
日産純正

1974. 3

FIG. 237-B NISSAN MOTOR CO., LTD.

BRAKE MASTER CYLINDER

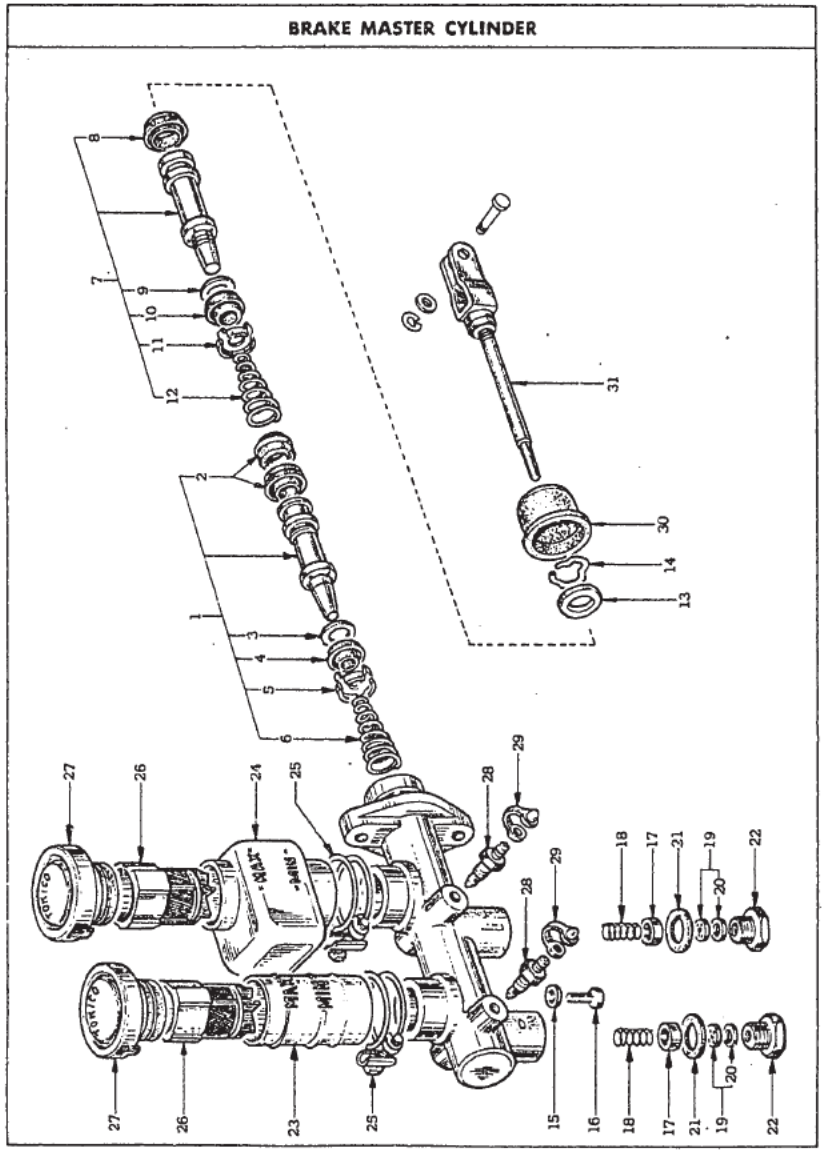

KEY No	PART NO.	PART NAME	QTY	MODELS
		BRAKE MASTER CYLINDER (PZR) (up to '72 model)		
	46010-E8710....	**CYLINDER ASS'Y-brake master**	1	PZR
1	46073-U0211....	**PISTON ASS'Y-secondary**	1	PZR
2	46068-R1200....	CUP-piston	2	PZR
3	46066-U0512....	SPACER	1	PZR
4	46068-U0512....	CUP-piston	1	PZR
5	46062-U0512....	SEAT-spring	1	PZR
6	46075-U0512....	SPRING-return	1	PZR
7	46063-U0512....	**PISTON ASS'Y-primary**	1	PZR
8	46068-R1200....	CUP-piston	1	PZR
9	46066-E7411....	SPACER	1	PZR
10	46068-U0512....	CUP-piston	1	PZR
11	46062-U0512.....	SEAT-spring	1	PZR
12	46075-R1200....	SPRING-return	1	PZR
13	46002-26910....	STOPPER-piston	1	PZR
14	46070-27260....	RING-piston stopper	1	PZR
15	46079-R1200....	GASKET-piston stopper	1	PZR
16	46032-R1200....	STOPPER-secondary piston	1	PZR
17	46059-69010....	GUIDE-valve	2	PZR

1974. 3

FIG. 237-B

NISSAN MOTOR CO. LTD.

KEY No.	PART NO.	PART NAME	QTY	MODELS
18	46027–73010....	SPRING-valve	2	PZR
19	46050–73410....	**VALVE ASS'Y-residual**	2	PZR
20	46057–73410....	RETAINER-valve	2	PZR
21	46036–30100....	PACKING-valve	2	PZR
22	28276–0502P....	CAP-valve	2	PZR
23	46090–U0512....	RESERVOIR-oil	1	PZR
24	46091–U0512....	RESERVOIR-oil	1	PZR
25	46016–10610....	BAND-oil reservoir	2	PZR
26	46093–N0410....	FILTER-oil	2	PZR
27	46020–U0512....	CAP ASS'Y-oil reservoir	2	PZR
28	41128–U0512....	SCREW-bleeder	2	PZR
29	41129–A2410....	CAP-bleeder screw	2	PZR
30	46084–U0211....	COVER-dust	1	PZR
31	46080–E8710....	ROD ASS'Y-push	1	PZR
	46010–E8726....	**REPAIR KIT-master cylinder**	(1)	PZR
(2)	46068–R1200....	CUP-piston	2	PZR
(4)	46068–U0512....	CUP-piston	1	PZR
(14)	46070–27260....	RING-piston stopper	1	PZR
(15)	46079–R1200....	GASKET-piston stopper	1	PZR
(19)	46050–73410....	VALVE ASS'Y-residual	2	PZR

KEY No.	PART NO.	PART NAME	QTY	MODELS
(21)	46036–30100....	PACKING-valve	2	PZR
(29)	41129–A2410....	CAP-bleeder screw	2	PZR
(30)	46084–U0211....	COVER-dust	1	PZR

FIG. 238

NISSAN MOTOR CO., LTD.

MASTER VAC

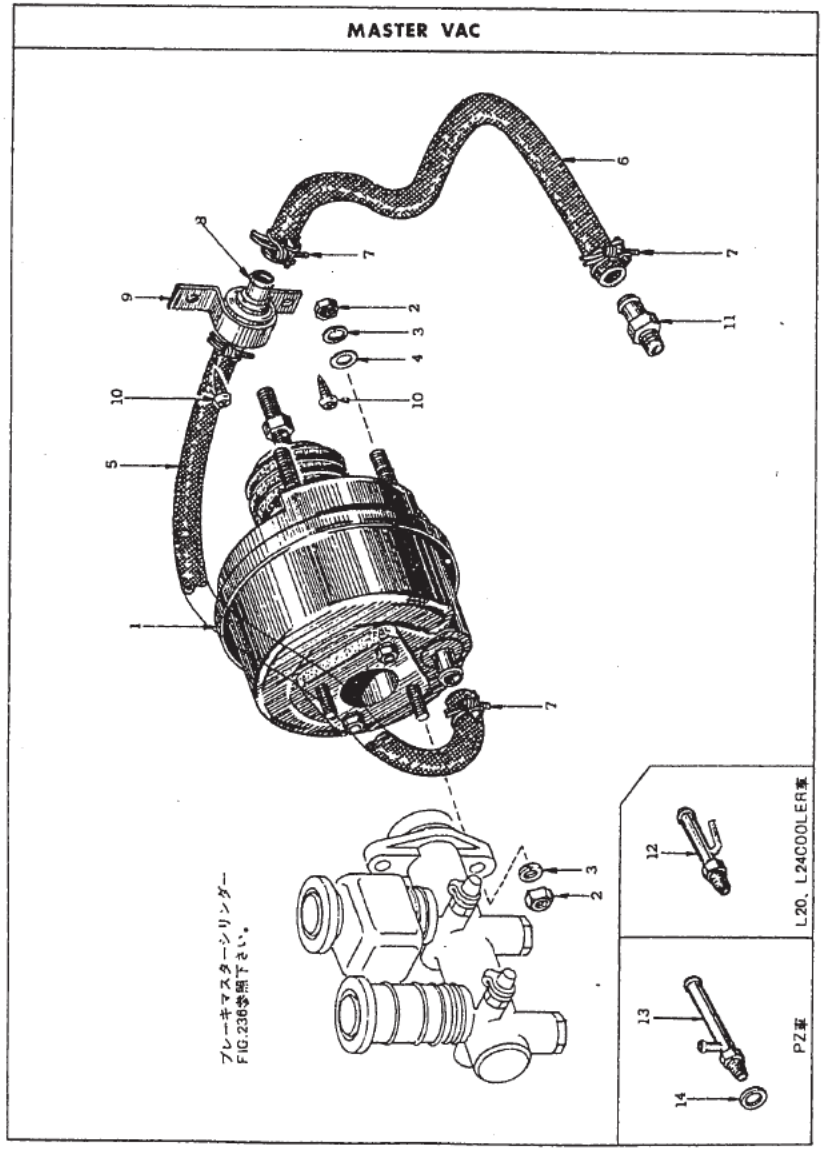

KEY No	PART NO	PART NAME	QTY	MODELS
		MASTER VAC		
1	47210−E4600....	MASTER VAC ASS'Y-brake	1	ZS,ZL,PZ ┐ × 注1.
	47210−E4601....	MASTER VAC ASS'Y-brake	1	L20,PZ ┘
		注1. 印互換性は46123-E8200のピンと同時交換により使用可能です。		
	47210−E8700....	MASTER VAC ASS'Y-brake (from '72 model)	1	ALL(exc.PZR) ┐ ×
	47210−N3000....	MASTER VAC ASS'Y-brake (from '73 model)	1	ALL(exc.PZR) ┘ ×
2	08911−10810....	NUT	6	ALL
3	08915−13810....	WASHER-lock	6	ALL
4	08915−43810....	WASHER-plain	4	ALL
5	47471−E4101....	HOSE-master vac to check valve	1	ALL(exc.PZR) ┐ ×
	47471−N3000....	HOSE-master vac to check valve (from '73 model)	1	ALL(exc.PZR) ┘ ×
6	47474−E4101....	HOSE-check valve to manifold	1	L20,PZ ┐ ×
	47474−E4102....	HOSE-check valve to manifold (from '70-7)	1	ALL (exc.PZ,PZR) ┘ ×
(6)	47474−E4200....	HOSE-check valve to manifold	1	PZ
7	08723−11600....	CLAMP-hose	4	ALL(exc.PZR)
8	47478−65000....	VALVE ASS'Y-check	1	L20,PZ ┐ ○
	47478−A5100....	VALVE ASS'Y-check	1	ALL(exc.PZR) ┘ △
	47478−U0500....	VALVE ASS'Y-check	1	ALL(exc.PZR) ┘ △

1974, 3

FIG. 238 NISSAN MOTOR CO. LTD.

KEY No.	PART NO	PART NAME	QTY	MODELS
9	47477–E4100....	CLAMP-check valve	1	ALL(exc.PZR)
	47477–N3000....	CLAMP-check valve (from '73 model)	1	ALL(exc.PZR)
10	08360–41214....	SCREW-with lock washer	2	ALL(exc.PZR)
11	47475–73402....	CONNECTOR-master vac hose	1	ZS,ZL
	47475–E3200....	CONNECTOR-master vac hose	1	ZS,ZL
	47475–E4101....	CONNECTOR-master vac hose (from '70-7)	1	L20,L24 (exc.PZ,PZR)
	47475–E4100....	CONNECTOR-master vac hose (up to '72)	1	A-all
12	47475–E4401....	CONNECTOR-master vac hose (cooler)	1	L20, L24
13	47475–E4200....	CONNECTOR-master vac hose	1	PZ
14	05412–1200P....	GASKET	1	PZ

NOTE

●エレファント　スーパーPCV

スラッジやワニスの堆積を防止する能力はずばぬけておりエンジン内部をきれいに保ちます。低温スラッジでオイルの通路を閉鎖することもありません。

エレファント
モーターオイル
日産純正

FIG. 239-A NISSAN MOTOR CO., LTD.

BRAKE PIPING

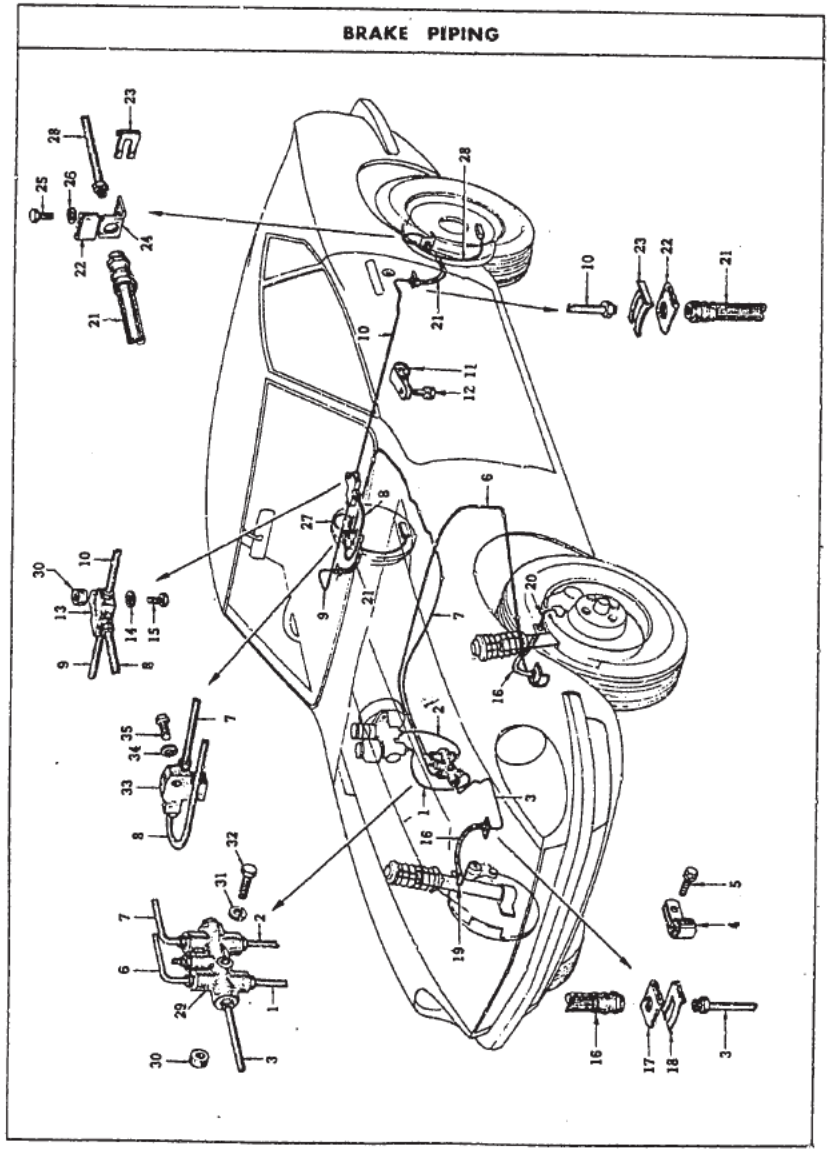

KEY No.	PART NO.	PART NAME	QTY	MODELS
		BRAKE PIPING (up to '72)		
1	46221–E4301....	TUBE ASS'Y-master cylinder to indicator switch front	1	L20, PZ ┐ × ┘
	46221–E8701....	TUBE ASS'Y-master cylinder to indicator switch front (from C/# S30-007501,PS30-000501)	1	ALL(exc.PZR)
(1)	46221–E4100....	TUBE ASS'Y-master cylinder to indicator switch front	1	PZR ┐ △ ┘
	46221–E8711....	TUBE ASS'Y-master cylinder to indicator switch front (from C/# PS30-000501)	1	PZR
2	46241–E4301....	TUBE ASS'Y-master cylinder to indicator switch rear	1	L20, PZ ┐ × ┘
	46241–E8701....	TUBE ASS'Y-master cylinder to indicator switch rear (from C/# S30-007501,PS30-000501)	1	ALL(exc.PZR)
(2)	46241–E4100....	TUBE ASS'Y-master cylinder to indicator switch rear	1	PZR ┐ △ ┘
	46241–E8711....	TUBE ASS'Y-master cylinder to indicator switch rear (from C/# PS30-000501)	1	PZR
3	46243–E4101....	TUBE ASS'Y-indicator switch to front brake hose(R.H.)	1	L20, S20 ┐ △ ┘
	46243–E8700....	TUBE ASS'Y-indicator switch to front brake hose(R.H.) (from C/# S30-007501,PS30-000501)	1	ALL
4	46350–E4100....	**CLAMP ASS'Y-brake tube**	1	ALL
	46360–E4100....	RUBBER-tube clamp	1	ALL
5	08360–41214....	SCREW	1	ALL
6	46245–E4101....	TUBE ASS'Y-indicator switch to front brake hose(L.H.)	1	L20,S20 ┐ △ ┘
	46245–E8700....	TUBE ASS'Y-indicator switch to front brake hose(L.H.) (from C/# S30-007501,PS30-000501)	1	ALL
4	46350–E4100....	**CLAMP ASS'Y-brake tube**	5	ALL
	46360–E4100....	RUBBER-tube clamp	5	ALL
5	08360–41214....	SCREW	5	ALL

1974, 3

FIG. 239-A NISSAN MOTOR CO. LTD.

KEY No	PART NO	PART NAME	QTY	MODELS
7	46223–E4101....	TUBE ASS'Y-indicator switch to "P" valve	1	L20, S20 △
	46223–E8700....	TUBE ASS'Y-indicator switch to "P" valve (from C/# S30-007501,PS30-000501)	1	ALL △
8	46247–E4100....	TUBE ASS'Y-"P" valve to 3 way connector	1	L20, S20 △
	46247–E8700....	TUBE ASS'Y-"P" valve to 3 way connector (from C/# S30-007501,PS30-000501)	1	ALL △
9	46227–E4101....	TUBE ASS'Y-3 way connector to rear brake hose(R.H.)	1	L20, S20 △
	46227–E8700....	TUBE ASS'Y-3 way connector to rear brake hose(R.H.) (from C/# S30-007501,PS30-000501)	1	ALL △
10	46229–E4101....	TUBE ASS'Y-3 way connector to rear brake hose(L.H.)	1	L20, S20 △
	46229–E8700....	TUBE ASS'Y-3 way connector to rear brake hose(L.H.) (from C/# S30-007501,PS30-000501)	1	ALL △
11	46350–E4100....	**CLAMP ASS'Y-brake tube**	3	ALL
	46360–E4100....	RUBBER-tube clamp	3	ALL
12	08360–41214....	SCREW	2	ALL
	08911–10410....	NUT	1	ALL
	08915–13410....	WASHER-lock	1	ALL
13	46313–68201....	CONNECTOR-brake tube 3 way	1	ALL
14	08915–13810....	WASHER-lock	1	ALL
15	08110–82610....	BOLT	1	ALL
16	46202–89911....	HOSE ASS'Y-brake front (260mm)	2	ALL
17	46205–61000....	PLATE-lock, brake hose	4	ALL
18	46206–18000....	SPRING-lock, brake hose	4	ALL

NISSAN MOTOR CO. LTD. FIG. 239-A

KEY No	PART NO	PART NAME	QTY	MODELS
19	41220–E4100....	TUBE ASS'Y-bridge, front brake (R.H.)	1	ALL ○
	41220–E8700....	TUBE ASS'Y-bridge, front brake (R.H.)	1	ALL ○
20	41230–E4100....	TUBE ASS'Y-bridge, front brake (L.H.)	1	ALL ○
	41230–E8700....	TUBE ASS'Y-bridge, front brake (L.H.)	1	ALL ○
21	46202–89913....	HOSE ASS'Y-brake rear (280mm)	2	ALL
22	46205–61000....	PLATE-lock, brake hose	4	ALL
23	46206–18000....	SPRING-lock, brake hose	4	ALL
24	46325–E4100....	BRACKET-rear brake hose	2	ALL
25	08120–61010....	BOLT	4	ALL
26	08915–13610....	WASHER-lock	4	ALL
27	44220–E4100....	TUBE ASS'Y-bridge, rear brake (R.H.)	1	ALL ○ ×
	44220–E8700....	TUBE ASS'Y-bridge, rear brake (R.H.)	1	ALL ○ ×
	44220–E8701....	TUBE ASS'Y-bridge, rear brake (R.H.)(from '72-7)	1	ALL ○ ×
28	44230–E4100....	TUBE ASS'Y-bridge, rear brake (L.H.)	1	ALL ○ ×
	44230–E8700....	TUBE ASS'Y-bridge, rear brake (L.H.)	1	ALL ○ ×
	44230–E8701....	TUBE ASS'Y-bridge, rear brake (L.H.)(from '72-7)	1	ALL ○ ×
29	46100–26100....	SWITCH ASS'Y-brake indicator	1	ALL
30	46257–21003....	SPACER-brake tube connector	2	ALL
31	08915–13610....	WASHER-lock (fixing indicator switch)	1	ALL
32	08120–64810....	BOLT (fixing indicator switch)	1	ALL

1974. 3

FIG. 239-A1 NISSAN MOTOR CO. LTD.

KEY No	PART NO	PART NAME		Q'TY	MODELS
33	46400-E4100....	"P" VALVE ASS'Y		1	ALL ┐
	46400-E4101....	"P" VALVE ASS'Y		1	ALL ┘ ○
34	08915-13610....	WASHER-lock	fixing "P" valve	1	ALL
35	08120-65010....	BOLT	fixing "P" valve	1	ALL

NOTE

●エレファント　スーパーデラックス

ドロドロした低温スラッジがオイルの通路をふさぐ心配がないので信号待ちの多い市街地を走る場合でも快調です。

エレファント
モーターオイル
日産純正

FIG. 239-B NISSAN MOTOR CO., LTD

BRAKE PIPING

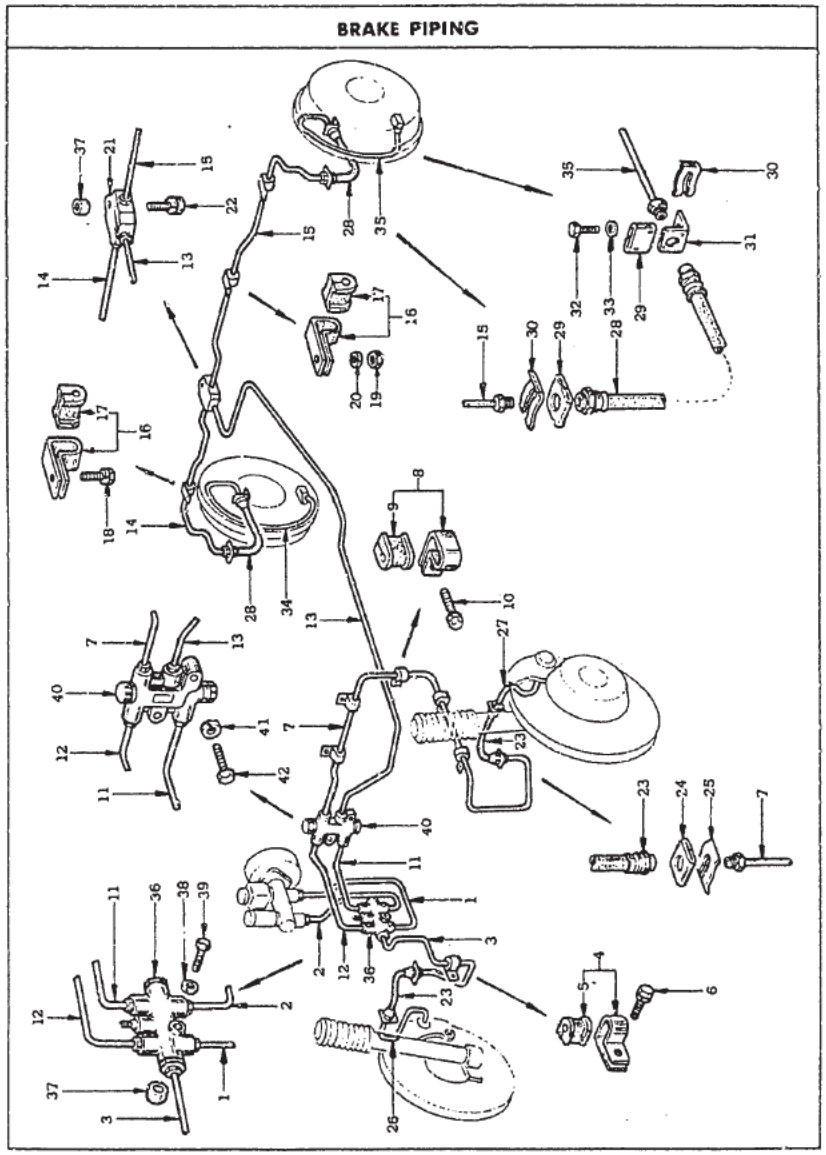

KEY No.	PART NO	PART NAME	QTY	MODELS
		BRAKE PIPING (from '73)		
1	46221–N3000....	TUBE ASS'Y-master cylinder to indicator switch, front	1	ALL
	46221–N3005....	TUBE ASS'Y-master cylinder to indicator switch, front (from '73-2)	1	ALL
2	46241–N3000....	TUBE ASS'Y-master cylinder to indicator switch, rear	1	ALL
	46241–N3005....	TUBE ASS'Y-master cylinder to indicator switch, rear (from '73-2)	1	ALL
3	46243–N3000....	TUBE ASS'Y-indicator switch to front brake hose(R.H.)	1	ALL
	46243–N3005....	TUBE ASS'Y-indicator switch to front brake hose(R.H.) (from '73-2)	1	ALL
4	46350–E4100....	**CLAMP ASS'Y-brake tube**	1	ALL
5	46360–E4100....	RUBBER-tube clamp	1	ALL
6	08360–41214....	SCREW	1	ALL
7	46245–N3000....	TUBE ASS'Y-"P" valve to front brake hose (L.H.)	1	ALL
	46245–N3005....	TUBE ASS'Y-"P" valve to front brake hose (L.H.) (from '73-2)	1	ALL
8	46350–E4100....	**CLAMP ASS'Y-brake tube**	5	ALL
9	46360–E4100....	RUBBER-tube clamp	5	ALL
10	08360–41214....	SCREW	5	ALL
11	46222–N3000....	TUBE ASS'Y-indicator switch to "P" valve, lower	1	ALL
	46222–N3005....	TUBE ASS'Y-indicator switch to "P" valve, lower (from '73-2)	1	ALL
12	46244–N3000....	TUBE ASS'Y-indicator switch to "P" valve, upper	1	ALL
	46244–N3005....	TUBE ASS'Y-indicator switch to "P" valve, upper (from '73-2)	1	ALL

FIG. 239-B

NISSAN MOTOR CO. LTD.

KEY No	PART NO	PART NAME	QTY	MODELS
13	46223–N3000....	TUBE ASS'Y-"P" valve to 3 way connector	1	ALL
	46223–N3005....	TUBE ASS'Y-"P" valve to 3 way connector (from '73-2)	1	ALL
14	46227–E8700....	TUBE ASS'Y-3 way connector to rear brake hose(R.H.)	1	ALL
	46227–E8705....	TUBE ASS'Y-3 way connector to rear brake hose(R.H.) (from '73-2)	1	ALL
15	46229–E8700....	TUBE ASS'Y-3 way connector to rear brake hose(L.H.)	1	ALL
	46229–E8705....	TUBE ASS'Y-3 way connector to rear brake hose(L.H.) (from '73-2)	1	ALL
16	46350–E4100....	**CLAMP ASS'Y-brake tube**	3	ALL
17	46360–E4100....	RUBBER-tube clamp	3	ALL
18	08360–41214....	SCREW	2	ALL
19	08911–10410....	NUT	1	ALL
20	08915–13410....	WASHER-lock	1	ALL
21	46313–68201....	CONNECTOR-brake tube 3 way	1	ALL
22	08110–82525....	BOLT-with lock washer	1	ALL
23	46202–89911....	HOSE ASS'Y-brake front (L=260mm)	2	ALL
24	46205–61000....	PLATE-lock, brake hose	4	ALL
25	46206–18000....	SPRING-lock, brake hose	4	ALL
26	41220–E8710....	TUBE ASS'Y-bridge, front brake (R.H.)	1	ALL
27	41230–E8710....	TUBE ASS'Y-bridge, front brake (L.H.)	1	ALL
28	46202–89913....	HOSE ASS'Y-brake rear (L=280mm)	2	ALL
29	46205–61000....	PLATE-lock, brake hose	4	ALL

KEY No.	PART NO	PART NAME	QTY	MODELS
30	46206–18000....	SPRING-lock, brake hose	4	ALL
31	46325–E4100....	BRACKET-rear brake hose	2	ALL
32	08120–61010....	BOLT	4	ALL
33	08915–13610....	WASHER-lock	4	ALL
34	44220–E8710....	TUBE ASS'Y-bridge, rear brake (R.H.)	1	ALL
35	44230–E8710....	TUBE ASS'Y-bridge, rear brake (L.H.)	1	ALL
36	46100–26100....	SWITCH ASS'Y-brake indicator	1	ALL
37	46257–21003....	SPACER-brake tube connector to fixing I/SW & "P" valve	2	ALL
38	08915–13610....	WASHER-lock (to fixing indicator switch)	1	ALL
39	08120–64810....	BOLT (to fixing indicator switch)	1	ALL
40	46400–N3000....	N-P VALVE ASS'Y-4 way brake	1	ALL
41	08915–13610....	WASHER-lock (to fixing "P" valve)	1	ALL
42	08120–65010....	BOLT (to fixing "P" valve)	1	ALL

FIG. 240 NISSAN MOTOR CO., LTD.

BRAKE INDICATE SWITCH & SKID CONT VALVE

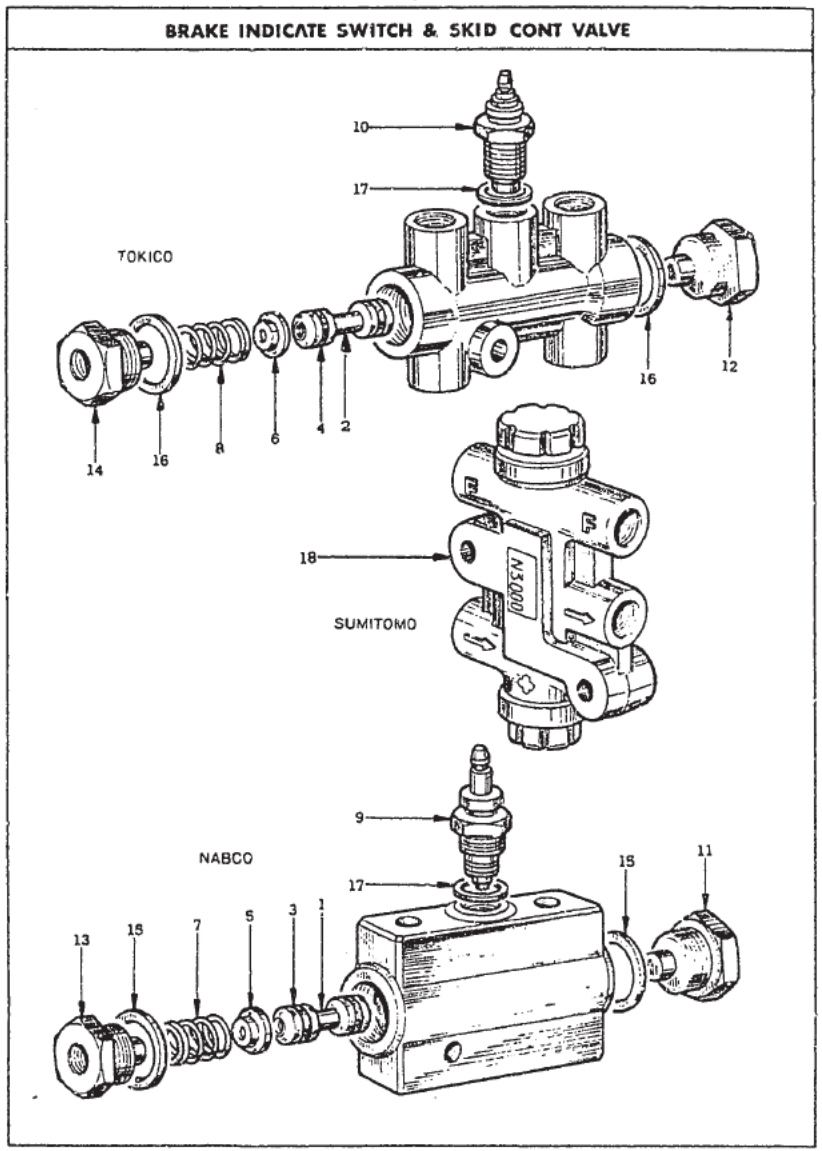

KEY No	PART NO	PART NAME	QTY	MODEL
		BRAKE INDICATOR SWITCH		
	46100–26100....	**SWITCH ASS'Y-brake indicator**	1	ALL
1	46136–26100....	PISTON-indicator (NABCO)	1	ALL
2	46136–26110....	PISTON-indicator (TOKICO)		
3	46137–26100....	"O" RING-piston (NABCO)	2	ALL
4	46137–26110....	"O" RING-piston (TOKICO)		
5	46138–26100....	PLATE-throttle (NABCO)	2	ALL
6	46138–26110....	PLATE-throttle (TOKICO)		
7	46139–26100....	SPRING-piston (NABCO)	2	ALL
8	46139–26110....	SPRING-piston (TOKICO)		
9	46140–26100....	TERMINAL ASS'Y (NABCO)	2	ALL
10	46140–26110....	TERMINAL ASS'Y (TOKICO)		
11	46146–26100....	PLUG-cylinder A (NABCO)	1	ALL
12	46142–26110....	PLUG-cylinder A (TOKICO)		
13	46142–26100....	PLUG-cylinder B (NABCO)	1	ALL
14	46141–26110....	PLUG-cylinder B (TOKICO)		
15	46143–26100....	PACKING-plug (NABCO)	2	ALL
16	46143–26110....	PACKING-plug (TOKICO)		
17	41131–85060....	PACKING (TOKICO)	1	ALL

1974, 3

FIG. 240 NISSAN MOTOR CO. LTD.

KEY No	PART NO.	PART NAME	Q'TY	MODELS
		SKID CONTROL VALVE		
18	46400-E4100....	VALVE ASS'Y-proportioning for rear tube	1	ALL ┐ ○
	46400-E4101....	VALVE ASS'Y-proportioning for rear tube	1	ALL ┘
	46400-N3000....	N-P VALVE ASS'Y-4 way brake for front tube (from '73 model)	1	ALL ×(注)1

注. 上記のバルブはFeg239で紹介していますが'73年車より使用場所がリア チューブ側よりフロント チューブ側に変更しましたので形状を明確にするために記載しました。

NOTE

●エレファント スーパーPCV

PCV装置によって発生しやすくなったサビや汚れを完全に抑制する高度の特性を備えた新時代のオイルです。

エレファント モーターオイル

日産純正

FIG. 241 NISSAN MOTOR CO., LTD.

STEERING GEAR & LINKAGE

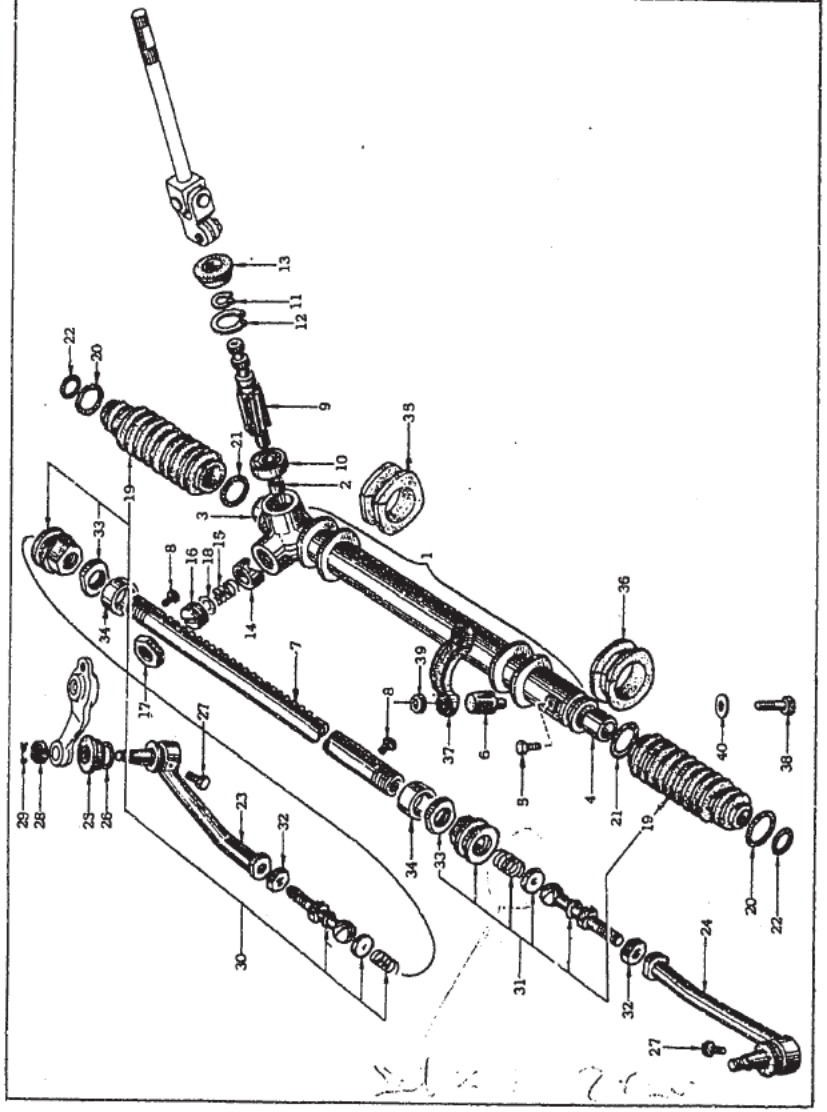

KEY No	PART NO.	PART NAME	QTY	MODELS
		STEERING GEAR		
	48001–E4152....	**GEAR ASS'Y-steering & linkage**	1	ZS,ZL,PZ
	48001–E4153....	**GEAR ASS'Y-steering & linkage**	1	ZS,ZL,ZA,PZ
	48001–E8750....	**GEAR ASS'Y-steering & linkage** (from C/# S30-007501, PS30-000501)	1	L20,L24,PZ
	48001–E7250....	**GEAR ASS'Y-steering & linkage**	1	PZR
	48001–E8751....	**GEAR ASS'Y-steering & linkage** (from C/# S30-007501, PS30-000501) (up to '72)	1	PZR
	48010–78505....	**GEAR ASS'Y-steering**	1	ALL
	48010–E8700....	**GEAR ASS'Y-steering**	1	ALL
1	48011–78502....	**HOUSING COMP.-steering gear**	1	ALL
2	48126–78500....	BUSHING-steering pinion	1	ALL
3	48127–78500....	BUSHING-steering pinion	1	ALL
4	48128–78500....	BUSHING-steering tube	1	ALL
5	40189–73000....	PLUG-filler	1	ALL
6	34366–0501P....	RESERVOIR-oil	1	ALL
7	48100–78500....	RACK-steering gear	1	ALL
8	48110–78500....	PLUG-filler, rack	2	ALL
9	48023–78501....	PINION-steering gear	1	ALL
10	48018–78500....	BEARING-pinion, steering gear	1	L20, S20
	48018–E8700....	BEARING-pinion, steering gear	1	ALL

1974. 3

FIG. 241 NISSAN MOTOR CO. LTD.

KEY No	PART NO.	PART NAME	QTY	MODELS
11	48265–78500....	RING-snap, pinion bearing inner (1.06t).....	as req.	ALL
	Other size			
	48266–78500 (1.11t)	48268–78500 (1.22t)		
	48267–78500 (1.16t)	48269–78500 (1.26t)		
12	48271–78500....	RING-snap, pinion, bearing outer (1.75t)	as req.	ALL
	Other size			
	48272–78500 (1.63t)	48274–78500 (1.73t)		
	48273–78500 (1.68t)			
13	48125–78500....	OIL SEAL-pinion	1	ALL
14	48236–78500....	RETAINER-steering gear	1	ALL
15	48237–78500....	SPRING-retainer	1	L20, S20
	48237–E4100....	SPRING-retainer ..... (from C/# S30-01213, PS30-00143)	1	ALL △
16	48231–78500....	SCREW-adjusting, retainer	1	ALL
17	48233–78500....	NUT-lock, adjusting	1	ALL
18	48238–E4100....	SIM-adjust steering (1.0t)	as req.	ALL
	Other size			
	48238–E4101 (0.5t)	48238–E4102 (0.25t)		
19	48203–78500....	BOOT-steering gear	2	ALL
	48203–E8700....	BOOT-steering gear	2	ALL ○
	48203–N3000....	BOOT-steering gear (from '73-5)	2	ALL △
20	40146–16500....	CLAMP-dust cover	2	ALL
21	48055–E8700....	CLAMP-boot, steering gear	2	ALL

KEY No	PART NO.	PART NAME	QTY	MODELS
22	48054–78500....	CLAMP-boot, steering gear	2	ALL
	48510–E6000....	**ROD ASS'Y-side (R.H.)**	1	L20,S20
	48630–E6000....	**ROD ASS'Y-side (L.H.)**	1	L20,S20 ○
	48510–E8700....	**ROD ASS'Y-side (R.H.)** ..... (from C/# S30-007501, PS30-000501)	1	ALL
	48630–E8700....	**ROD ASS'Y-side (L.H.)** ..... (from C/# S30-007501, PS30-000501)	1	ALL
23	48520–78500....	**SOCKET ASS'Y-side rod outer (R.H.)**	1	ALL
24	48640–78500....	**SOCKET ASS'Y-side rod outer (L.H.)**	1	ALL
25	48522–21000....	COVER-dust, side rod	2	ALL
26	48548–18000....	CLAMP-dust cover	2	ALL
27	40189–73000....	PLUG-filler	2	ALL
28	01227–00031....	NUT-slotted	2	ALL
29	08921–32510....	PIN-cotter	2	ALL
30	48512–E6025....	BAR SET-side rod (R.H.)	1	L20,S20
31	48612–E6025....	BAR SET-side rod (L.H.)	1	L20,S20 △ 注1
	48511–E8725....	BAR SET-side rod (R.H.)	1	ALL
	48611–E8725....	BAR SET-side rod (L.H.)	1	ALL
32	01211–00011....	NUT-lock (R.H.)	1	ALL
	01211–00021....	NUT-lock (L.H.)	1	ALL △
	48636–E8700....	NUT-lock	2	ALL

注1. Key20,30BAR SET-Side rod (R/L) の構成はKey19,33が一含まれます。
但しROD ASS'Y-Side (R/L) にはKey19は含まれませんので御注意下さい。

1974, 3

FIG. 241 NISSAN MOTOR CO. LTD.

KEY No.	PART NO	PART NAME	QTY	MODELS
33	48634-E4100....	NUT-stopper, steering	2	ALL
	48634-E8700....	NUT-stopper, steering (from '71-11)	2	ALL
34	48635-E4100....	SPACER-lock nut	2	ALL(exc.PZR)
	48635-E7200....	SPACER-lock nut (up to '72)	2	PZR
35	54444-78500....	INSULATOR-rack, steering mounting (R.H.)	1	L20,S20
36	54445-78500....	INSULATOR-rack, steering mounting (L.H.)	1	L20,S20
	54444-E4100....	INSULATOR-rack, steering mounting (R.H.)	1	L20,S20 △
	54445-E4100....	INSULATOR-rack, steering mounting (L.H.)	1	L20,S20 △
	54444-E4101....	INSULATOR-rack, steering mounting (R.H.)	1	ALL △(注)2
	54445-E4101....	INSULATOR-rack, steering mounting (L.H.)	1	ALL △(注)2
37	54449-E4100....	BRACKET ASS'Y-rack mounting upper	2	ALL
38	08130-82510....	BOLT	4	ALL
39	08912-80810....	self locking	4	ALL
40	08915-53810....	WASHER-plain	4	ALL

(注)2. 互換性は左右セット交換により可能です。

NOTE

●エレファント スーパーデラックス

冬期又は寒冷地にてノロノロ運転で発生しがちな錆や腐食からエンジンを守ります。

エレファント モーターオイル

日産純正

FIG. 242 NISSAN MOTOR CO., LTD.

STEERING COLUMN

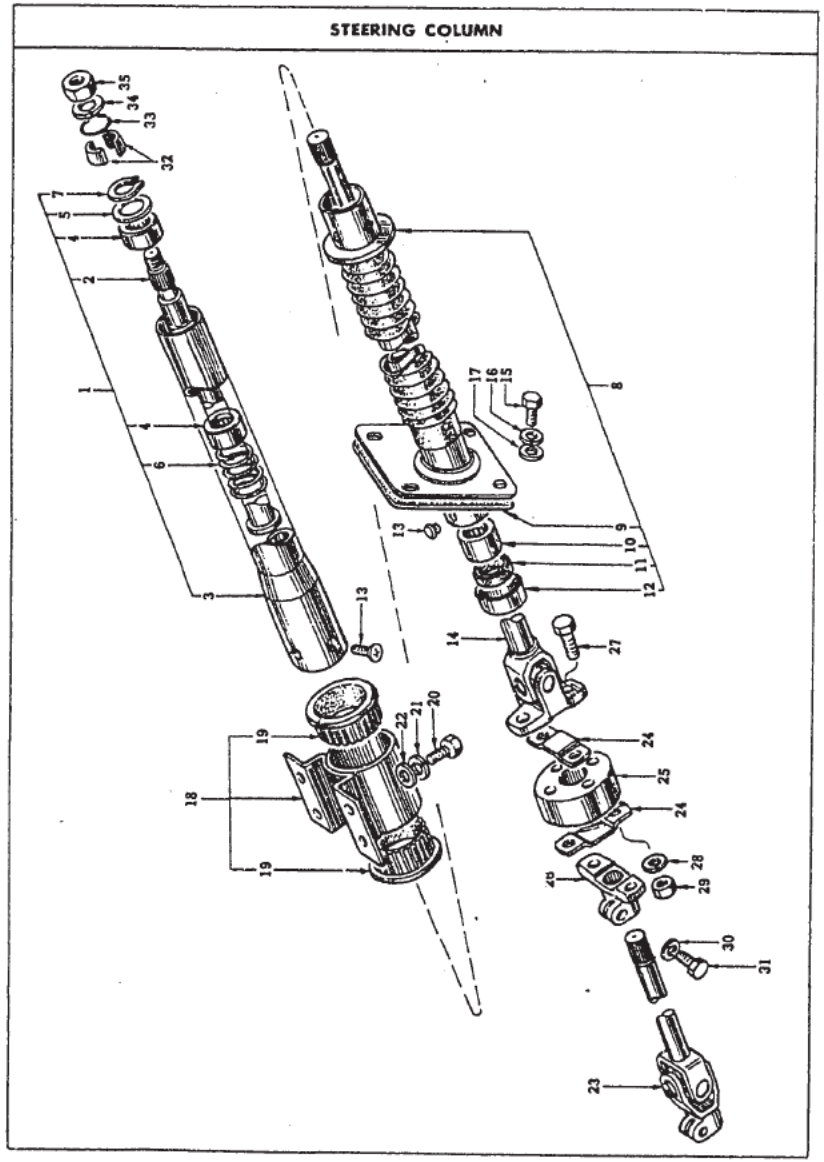

本部品は製造廃止につき構成部品で対応する。

STEERING COLUMN

KEY No	PART NO	PART NAME	Q'TY	MODEL
	48805–E4250....	**COLUMN ASS'Y-steering impact absorbing**	1	L20,S20
	48805–E4155....	**COLUMN ASS'Y-steering impact absorbing**	1	ALL
1	48810–E4200....	**COLUMN ASS'Y-steering upper**	1	ALL
2	48820–E4200....	SHAFT ASS'Y-steering upper	1	ALL
3	48860–E4200....	**JACKET ASS'Y-steering column**	1	ALL
4	48910–23100....	BEARING ASS'Y-steering column	2	ALL
5	48931–23100....	WASHER-plain, column bearing	2	ALL
6	48934–23101....	SPRING-steering column bearing	1	ALL
7	00922–12800....	RING-snap	1	ALL
8	48870–E4200....	**TUBE ASS'Y-jacket lower**	1	ALL
9	48954–E4200....	SHEET-rubber	1	ALL
10	48915–79012....	BEARING ASS'Y-steering lower	1	ALL
11	48924–79012....	OIL SEAL-steering column	1	ALL
12	48919–79012....	COVER-column bearing	1	ALL
13	48891–23100....	SCREW	3	ALL
14	48830–E4200....	SHAFT ASS'Y-steering column	1	L20,L24
	48830–E4205....	SHAFT ASS'Y-steering column	1	ALL
	48830–E4255....	SHAFT ASS'Y-steering column (from '71 model)	1	ALL

FIG. 242 NISSAN MOTOR CO., LTD.

KEY No.	PART NO.	PART NAME	QTY	MODELS
	48830–N3050....	SHAFT ASS'Y-steering column (from '73 model) ..	1	ALL △
15	08120–62610....	BOLT	4	ALL
16	08915–13610....	WASHER-lock	4	ALL
17	08915–43610....	WASHER-plain	4	ALL
18	48960–E4200....	**CLAMP ASS'Y-steering column**	1	ALL
19	48964–23100....	PACKING-steering column	2	ALL
20	08110–82510....	BOLT	4	ALL
21	08915–13810....	WASHER-lock	4	ALL
22	08915–43810....	WASHER-plain	4	ALL
23	48080–E4150....	JOINT ASS'Y-steering lower	1	ALL ┐
	48080–E4155....	JOINT ASS'Y-steering lower	1	ALL ┘ ○
24	48075–78506....	PLATE-coupling, steering	2	ALL
25	48073–78500....	COUPLING-rubber	1	ALL
26	48074–78505....	FLANGE-coupling	1	ALL
27	48078–78506....	BOLT-steering coupling	4	ALL
28	08915–13810....	WASHER-lock	4	ALL
29	08912–30810....	NUT	4	ALL
30	08915–14010....	WASHER-lock	2	ALL
31	08134–02810....	BOLT	2	ALL
32	48418–30800....	COLLAR-steering wheel	1	ALL

NISSAN MOTOR CO., LTD. FIG. 242

KEY No.	PART NO.	PART NAME	QTY	MODELS
33	48419–30800....	WIRE-collar	1	ALL
34	08916–14610....	WASHER-tooth lock	1	ALL
35	08911–34610....	NUT	1	ALL

FIG. 243 NISSAN MOTOR CO., LTD.

STEERING WHEEL

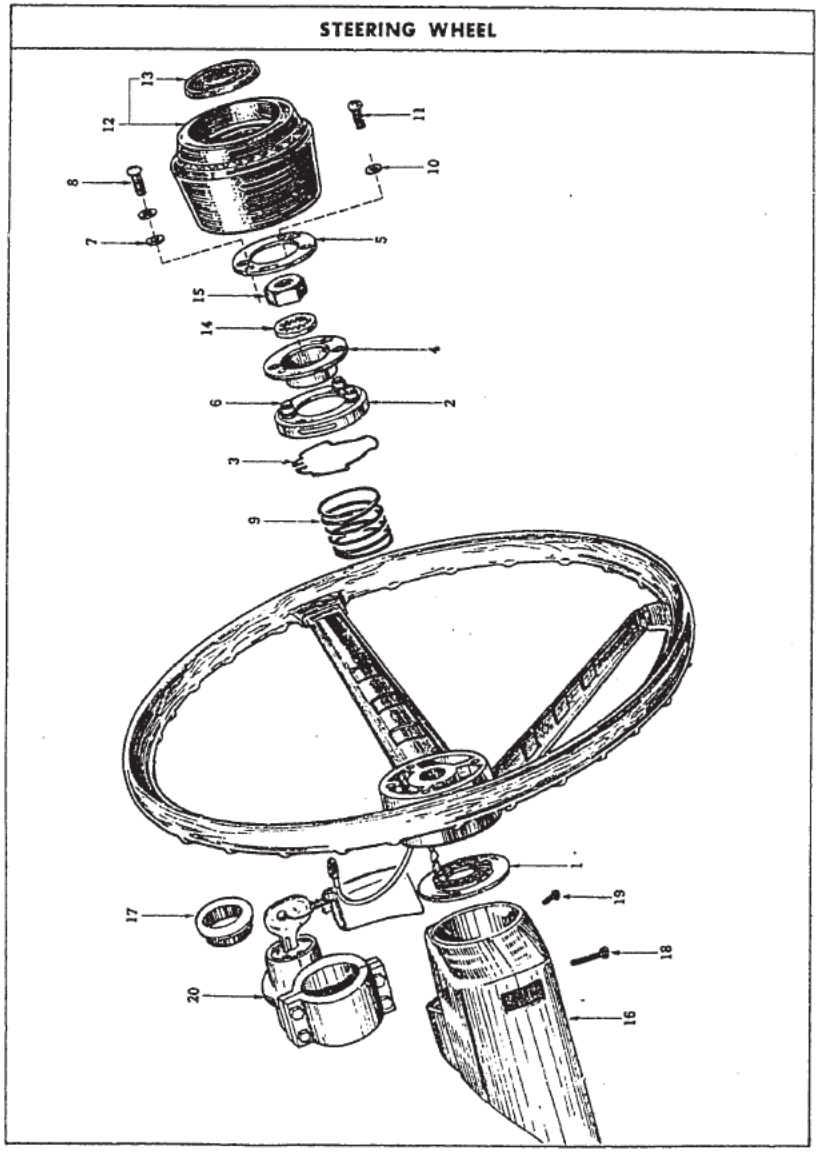

KEY No.	PART NO.	PART NAME	QTY	MODELS
		STEERING WHEEL		
	48400–E4101....	**WHEEL ASS'Y-steering** (木目)	1	ZS,ZL,ZA
	48400–E4200....	**WHEEL ASS'Y-steering** (木目)	1	PZ,PZR
	48400–E8200....	**WHEEL ASS'Y-steering (from C/# S30-04556)** (木目)	1	L20,L24 △
	48400–E8205....	**WHEEL ASS'Y-steering (from C/# PS30-00402)** (木目)	1	S20
1	48495–E4100....	RING COMP.-contact	1	ALL
2	48463–22000.....	INSULATOR-contact cup	1	ALL
3	48425–22000....	SPRING-retaining lock	1	ALL
4	48452–22000....	CUP-contact	1	ALL
5	48451–14800....	PLATE-contact upper	1	ALL
6	48466–12905....	INSULATOR-sub upper	3	ALL
7	48441–12905....	WASHER-plain	3	ALL
8	08310–61010....	SCREW	3	ALL
9	48441–22000....	SPRING-horn button	1	ALL
10	08915–10610....	WASHER-lock	1	ALL
11	08310–60610....	SCREW	1	ALL
12	48410–E4101....	**PAD COMP.-horn button**	1	L20,L24
(12)	48410–E4200....	**PAD COMP.-horn button**	1	S20
13	48423–E4101....	EMBLEM-horn button pad	1	L20,L24

1974, 3

FIG. 243 NISSAN MOTOR CO., LTD.

KEY No	PART NO	PART NAME	QTY	MODELS
(13)	48423–E4200....	EMBLEM-horn button pad	1	S20
14	08916–14610....	WASHER-tooth lock	1	ALL
15	08911–34610....	NUT	1	ALL

STEERING SHELL & LOCK

16	48470–E4101....	SHELL ASS'Y-steering column	1	ALL ┐ ×
	48470–N3200....	SHELL ASS'Y-steering column (from '73 model)	1	ALL ┘
17	48479–78801....	ESCUTCHEON-steering lock	1	L20,S20 ┐ △
17	48479–E4100....	ESCUTCHEON-steering lock	1	L20,S20 ┘ ┐ ×
	48479–E8200....	ESCUTCHEON-steering lock (from C/# S30-04556, PS30-00402)	1	ALL ┘
18	08513–41612....	SCREW	4	ALL
19	08330–31512....	SCREW	1	ALL
20	48700–E4100....	**LOCK ASS'Y-steering**	1	ALL ┐ ☆
	48700–E4200....	**LOCK ASS'Y-steering (from C/# S30-04556, PS30-00402)**	1	ALL ┘ ┐ △
	48700–N3000....	***LOCK ASS'Y-steering with switch (from '73-5)**	1	ALL ┘
	48700–N3010....	***LOCK ASS'Y-steering with switch (from '73-5)**	1	(op.) ALL

☆印互換性は48479-E8200と同時交換により使用可能です。

NOTE

●エレファント　フォーミュラ

高温高速運転時の耐久性にすぐれ常に最高の
エンジン性能を発揮でき信頼度は抜群です。

エレファント
モーターオイル
日産純正

1974, 3

FIG. 244 NISSAN MOTOR CO., LTD.

STEERING WHEEL

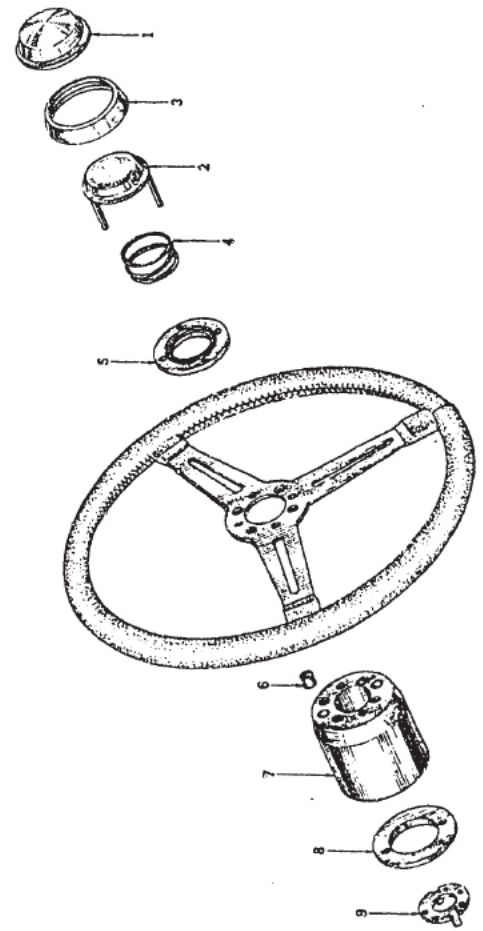

KEY No.	PART NO	PART NAME	QTY	MODELS
		STEERING WHEEL		
	48400–E4110....	**WHEEL ASS'Y-steering**	1	(op.)ALL(exc.PZ)
1	48420–E4110....	BUTTON-horn	1	(op.)ALL(exc.PZ)
2	48440–E4110....	CONTACT-horn switch	1	(op.)ALL(exc.PZ)
3	48432–E4110....	RETAINER-horn button	1	(op.)ALL(exc.PZ)
4	48441–E4110....	SPRING-horn button	1	(op.)ALL(exc.PZ)
5	48424–E4110....	RETAINER-horn	1	(op.)ALL(exc.PZ)
6	48492–E4110....	INSULATOR-contact rod	2	(op.)ALL(exc.PZ)
7	48402–E4110....	BOSS-lower	1	(op.)ALL(exc.PZ)
8	48495–E4110....	RING COMP.-contact	1	(op.)ALL(exc.PZ)
9	48406–22000....	PIN-winker	1	(op.)ALL(exc.PZ)

1974. 3

FIG. 245 NISSAN MOTOR CO., LTD.

FRONT SUSPENSION LINK

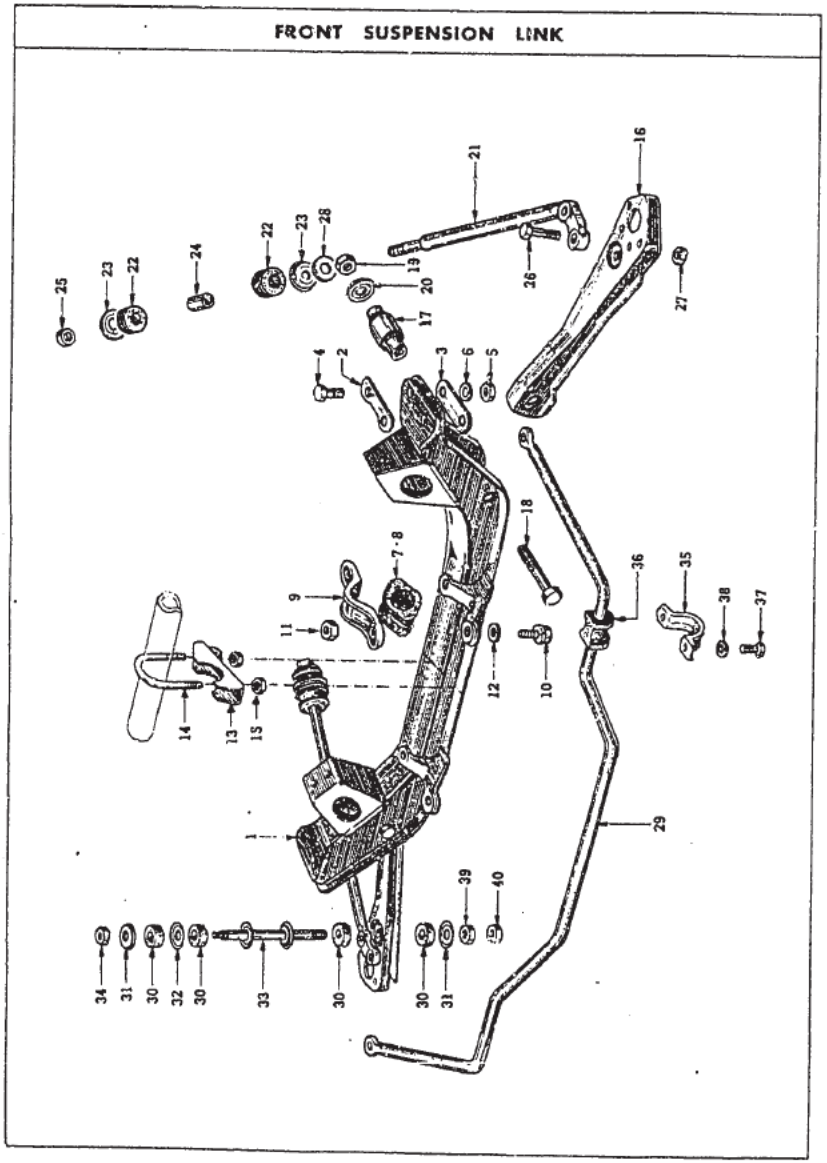

NISSAN MOTOR CO. LTD FIG. 245

KEY No.	PART NO.	PART NAME	QTY	MODELS
		FRONT SUSPENSION MEMBER		
1	54401–E4100....	MEMBER ASS'Y-front suspension	1	L20,L24
(1)	54401–E4200....	MEMBER ASS'Y-front suspension	1	S20
2	54407–21000....	WASHER-special	2	ALL
3	54409–E4100....	WASHER-plain	2	L20,L24
	54408–21000....	WASHER-plain	2	S20
4	08134–02510....	BOLT	4	ALL
5	08911–81010....	NUT	4	ALL
6	08915–14010....	WASHER-lock	4	ALL
7	54444–78500....	INSULATOR-rack, steering mounting (R.H.)	1	L20,S20
8	54445–78500....	INSULATOR-rack, steering mounting (L.H.)	1	L20,S20
	54444–E4100....	INSULATOR-rack, steering mounting (R.H.)	1	L20,S20
	54445–E4100....	INSULATOR-rack, steering mounting (L.H.)	1	L20,S20
	54444–E4101....	INSULATOR-rack, steering mounting (R.H.)	1	ALL
	54445–E4101....	INSULATOR-rack, steering mounting (L.H.)	1	ALL
9	54449–E4100....	BRACKET ASS'Y-rack mounting upper	2	ALL
10	08120–82510....	BOLT	4	L20,S20
	08130–82510....	BOLT-with lock washer (from C/# S30-01213, PS30-00143)	4	ALL
11	08912–80810....	NUT-self locking	4	ALL

1974. 3

FIG. 245 NISSAN MOTOR CO., LTD

KEY No.	PART NO.	PART NAME	QTY	MODELS
12	08915-53810....	WASHER-plain	4	ALL
13	54441-E4100....	STOPPER ASS'Y-rack	1	ALL
14	54442-E4100....	"U" BOLT-rack stopper	1	ALL
15	08912-80810....	NUT	2	ALL

FRONT SUSPENSION LINK

16	54530-E2300....	LINK ASS'Y-transverse	2	L20,S20 ┐△┘
	54530-E7300....	LINK ASS'Y-transverse	2	ALL ┐△┘
	54499-E8700....	LINK ASS'Y-transverse (R.H.)(from '73)	1	ALL ┐△
	54500-E8700....	LINK ASS'Y-transverse (L.H.)(from '73)	1	ALL ┘
17	54535-E4100....	BUSH ASS'Y-transverse link	2	ALL
18	54436-E4100....	BOLT-transverse link	2	ALL
19	08912-84410....	NUT-self locking	2	ALL
20	56114-73000....	WASHER-special	2	ALL
21	54470-E4100....	ROD-compression, front suspension	2	ALL
22	54476-21000....	BUSH-mounting, compression rod	4	ALL
23	54537-21003....	WASHER-special	4	ALL
24	54479-21000....	COLLAR-bush, tension rod	2	ALL
25	08912-84210....	NUT-self locking	2	ALL
26	08124-04510....	BOLT	4	ALL

KEY No.	PART NO.	PART NAME	QTY	MODELS
27	08912-84010....	NUT-self locking	4	ALL
28	08915-54210....	WASHER-plain	2	L20,S20 ┐△
	54475-E4100....	WASHER-special	2	L20,S20 ┘┐△
	54474-E4100....	WASHER-special	2	ALL ┘
29	54611-E4100....	BAR-torsion, front stabilizer	1	ALL
30	56112-09400....	BUSH-rubber	8	ALL
31	56113-09400....	WASHER-special outer	4	ALL
32	56114-09400....	WASHER-special inner	2	ALL
33	54618-21001....	ROD ASS'Y-connecting, front stabilizer	2	ALL
34	08912-34010....	NUT-self locking	2	ALL
35	54616-21001....	BRACKET-stabilizer mounting	2	ALL
36	54617-21002....	BUSH-stabilizer mounting	2	ALL
37	08120-82010....	BOLT	4	ALL
38	08915-13810....	WASHER-lock	4	ALL
39	08911-14010....	NUT	2	ALL
40	08911-34010....	NUT	2	ALL

1974, 3

FIG. 246 NISSAN MOTOR CO. LTD

FRONT SUSPENSION STRUT

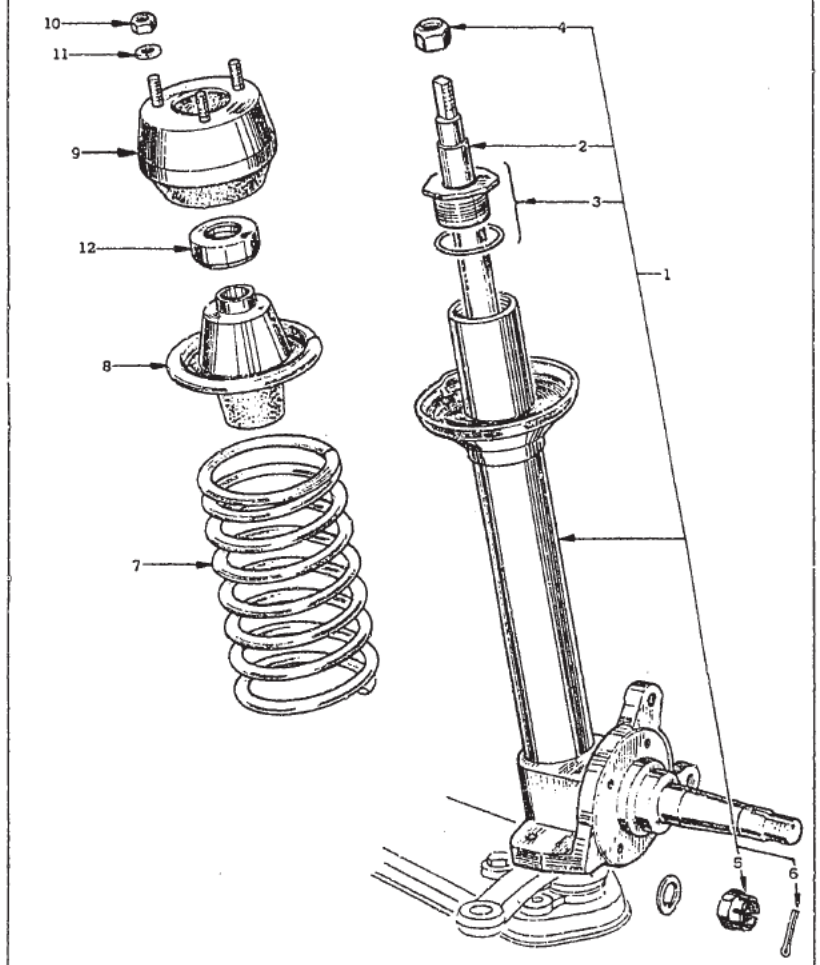

NISSAN MOTOR CO. LTD FIG. 246

KEY No.	PART NO	PART NAME	QTY	MODELS

FRONT SUSPENSION STRUT

1	54302-E4125....	STRUT ASS'Y-front suspension (R.H.)	1	ZS,ZL,ZA
(1)	54303-E4125....	STRUT ASS'Y-front suspension (L.H.)	1	ZS,ZL,ZA
	54302-E4126....	STRUT ASS'Y-front suspension (R.H.)	1	ZS,ZL,ZA
	54303-E4126....	STRUT ASS'Y-front suspension (L.H.)	1	ZS,ZL,ZA
	54302-E4127....	STRUT ASS'Y-front suspension (R.H.)	1	L20,L24
	54303-E4127....	STRUT ASS'Y-front suspension (L.H.)	1	L20,L24
1	54302-E4225....	STRUT ASS'Y-front suspension (R.H.)	1	S20
(1)	54303-E4225....	STRUT ASS'Y-front suspension (L.H.)	1	S20
	54302-E4226....	STRUT ASS'Y-front suspension (R.H.)	1	S20
	54303-E4226....	STRUT ASS'Y-front suspension (L.H.)	1	S20
	54302-E4227....	STRUT ASS'Y-front suspension (R.H.)	1	S20
	54303-E4227....	STRUT ASS'Y-front suspension (L.H.)	1	S20
2	56110-E4125....	SHOCK ABSORBER-front suspension	2	ALL
	56110-E4126....	SHOCK ABSORBER-front suspension	2	ALL
3	54308-E4125....	PACKING ASS'Y-grand	2	ALL
	54308-E4126....	PACKING ASS'Y-grand	2	ALL
	54313-22127....	OIL-strut	360cc	ALL

FIG. 246 NISSAN MOTOR CO., LTD.

KEY No.	PART NO.	PART NAME	QTY	MODELS
4	06912-84210....	NUT-self locking	2	ALL
	54324-N0100....	NUT-self locking	2	ALL
5	40262-A0100....	NUT-lock, wheel bearing	2	ALL
6	00921-43510....	PIN-cotter	2	ALL
		FRONT SPRING		
7	54010-E4104....	SPRING-front (R.H.)	1	L20,L24
	54010-E4102....	SPRING-front (L.H.)	1	L20,L24
	54010-E4105....	SPRING-front (R.H.)	1	(op.)L20,L24
	54010-E4103....	SPRING-front (L.H.)	1	(op.)L20,L24
	54010-E4203....	SPRING-front (R.H.)	1	PZ(op.)L24
	54010-E4202....	SPRING-front (L.H.)	1	PZ(op.)L24
	54010-E4202....	SPRING-front (R.H.)(up to '72)	1	PZR
	54010-E7200....	SPRING-front (L.H.)(up to '72)	1	PZR
8	54050-E4101....	BUMPER ASS'Y-bound	2	ALL
9	54320-E4100....	INSULATOR ASS'Y-strut mounting	2	ALL
10	08911-24010....	NUT	6	ALL
11	08915-14010....	WASHER-lock	6	ALL
12	54325-21000....	BEARING-strut mounting	2	ALL

NOTE

●エレファント フォーミュラ

国際ラリーやレースにおける輝かしい実績と豊富な経験を活かして開発に成功した高性能車用の画期的なモーターオイルです。

エレファント モーターオイル

日産純正

1974. 3

FIG. 247 NISSAN MOTOR CO., LTD.

REAR SUSPENSION STRUT

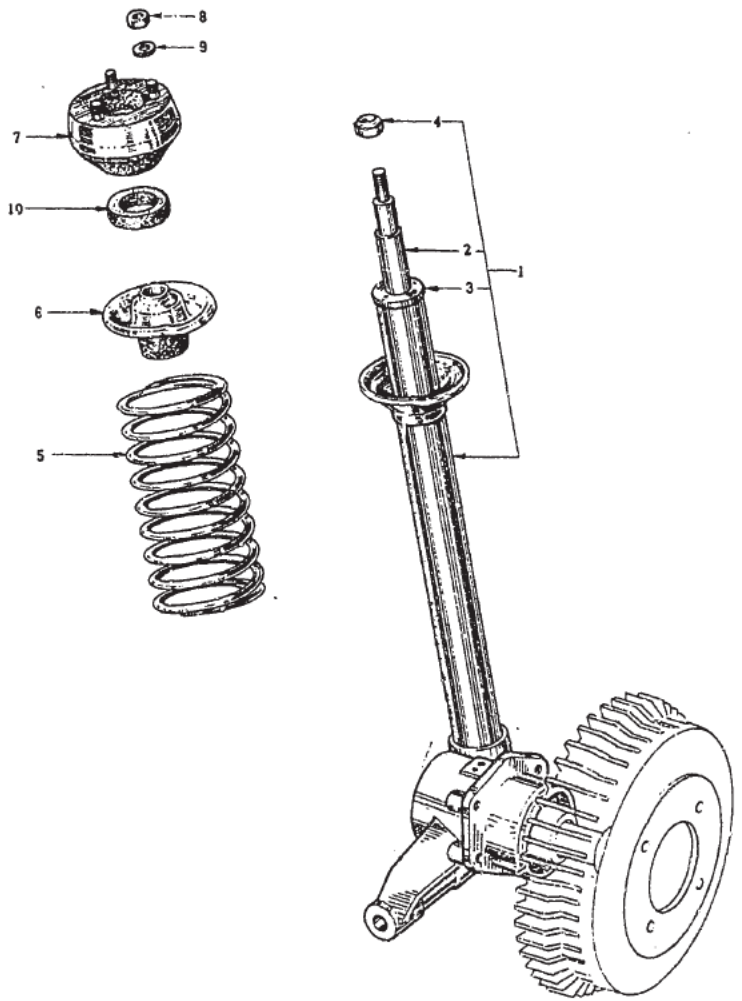

KEY No	PART NO	PART NAME	QTY	MODELS
		REAR SUSPENSION STRUT		
1	55302–E4125....	**STRUT ASS'Y-rear suspension (R.H.)**	1	L20,S20 △
	55302–E4126....	**STRUT ASS'Y-rear suspension (R.H.)**	1	ALL(~~exc.PZ~~) △
(1)	55303–E4125....	**STRUT ASS'Y-rear suspension (L.H.)**	1	L20,S20 △
	55303–E4126....	**STRUT ASS'Y-rear suspension (L.H.)**	1	ALL(~~exc.PZ~~) △
2	56210–E4125....	SHOCK ABSORBER ASS'Y-rear	2	ALL △
	56210–E4126....	SHOCK ABSORBER ASS'Y-rear	2	ALL(~~exc.PZ~~) △
3	54308–E4125....	PACKING ASS'Y-grand	2	L20,S20 △
	54308–E4126....	PACKING ASS'Y-grand	2	ALL
	54313–22127....	OIL-strut	360cc	ALL
4	08912–84210....	NUT-self locking	2	ALL ○
	54324–N0100....	NUT-self locking	2	ALL
5	55020–E4102....	SPRING-rear suspension	2	L20,L24
	55020–E4201....	SPRING-rear suspension	2	PZ(op.)L24
	55020–E7200....	SPRING-rear suspension (up to '72)	2	PZR
6	54050–E4101....	BUMPER ASS'Y-bound	2	ALL
7	54320–E4100....	INSULATOR ASS'Y-strut mounting	2	ALL
8	08911–24010....	NUT	6	ALL
9	08915–14010....	WASHER-lock	6	ALL

1974. 3

FIG. 247 NISSAN MOTOR CO. LTD.

KEY No	PART NO	PART NAME	QTY	MODELS
10	55045-E4100....	SPACER-rear spring	2	ALL

NOTE

●エレファント　スーパーPCV

耐摩耗性がすぐれているので、いつまでも良好なエンジン性能が維持されしかも燃費を節約できます。

エレファント
モーターオイル
日産純正

FIG. 248 NISSAN MOTOR CO., LTD.

REAR SUSPENSION LINK

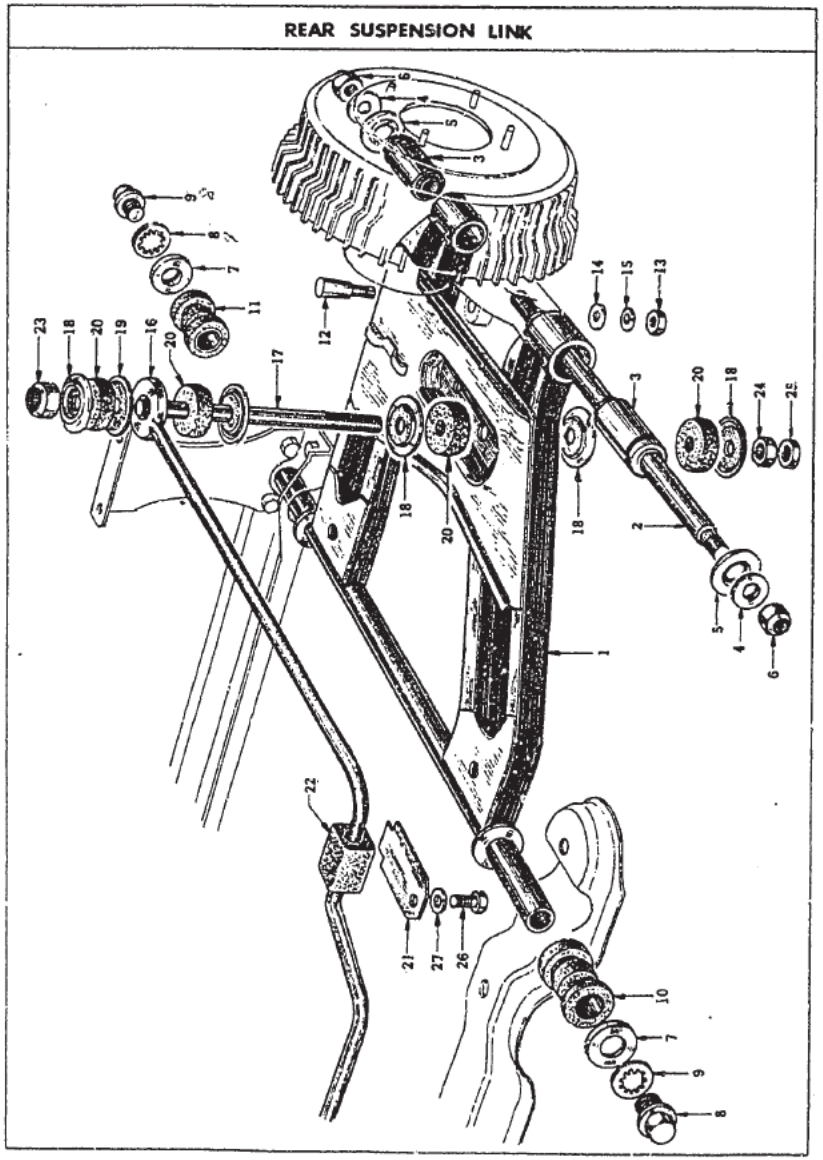

KEY No.	PART NO.	PART NAME	QTY	MODELS
		REAR SUSPENSION LINK		
1	55510–E4150....	LINK ASS'Y-transverse, rear suspension	2	L20,S20 ┐ ○ ┘
	55510–E4151....	LINK ASS'Y-transverse, rear suspension	2	ALL
2	55540–E4100....	SPINDLE-transverse link rear	2	ALL ◁
	55540-N3701	—"—	2	—"— ◁
3	55541–E4100....	BUSH ASS'Y-transverse link outer	4	ALL
4	08915–54210....	WASHER-plain	4	ALL ┐ ○ ┘
	55543–E4100....	WASHER-plain	4	ALL ┐ ○ ┘
	54474–E4100....	*WASHER-special, F (from '70-2)	4	ALL ┐ △ ┘
5	55542–E4100....	STOPPER-rubber, transverse link	4	ALL
6	08912–84210....	NUT-self lock	4	ALL
7	55553–E4100....	WASHER-special	4	ALL
8	55525–E4100....	BOLT-transverse link mounting	4	ALL
9	55527–E4100....	WASHER-tooth lock	4	ALL
10	55554–E4100....	BUSH ASS'Y-transverse link inner front	2	ALL
11	55555–E4100....	BUSH ASS'Y-transverse link inner rear	2	ALL
12	55565–E4100....	BOLT-lock, transverse link spindle	2	ALL
13	08911–10810....	NUT	2	ALL
14	08915–43810....	WASHER-plain	2	ALL
15	08915–13810....	WASHER-lock	2	ALL

1974, 3

FIG. 248 NISSAN MOTOR CO., LTD.

KEY No	PART NO	PART NAME	QTY	MODELS
16	55611–E4200....	BAR-torsion, rear stabilizer (Φ=18)	1	PZ,PZR(op.L24)
17	54618–21001....	**ROD ASS'Y-connecting stabilizer**	2	PZ,PZR(op.L24)
18	56113–09400....	WASHER-special outer	8	PZ,PZR(op.L24)
19	56114–09400....	WASHER-special inner	4	PZ,PZR(op.L24)
20	56112–09400....	BUSH-rubber, shock absorber mounting	8	PZ,PZR(op.L24)
21	54617–73000....	PLATE-stabilizer mounting	2	PZ,PZR(op.L24)
22	54613–66000....	BUSH-rubber, stabilizer mounting (Φ=19)	2	PZ,PZR(op.L24)
23	08912–74010....	NUT-self locking	2	PZ,PZR(op.L24) △
	08912–34010....	NUT-self locking	2	PZ,PZR(op.L24) △
24	08911–14010....	NUT	2	PZ,PZR(op.L24)
25	08911–34010....	NUT	2	PZ,PZR(op.L24)
26	08110–81610....	BOLT	2	PZ,PZR(op.L24)
27	08915–13810....	WASHER-lock	2	PZ,PZR(op.L24)

NOTE

●エレファント　スーパーPCV

スラッジやワニスの堆積を防止する能力はずばぬけておりエンジン内部をきれいに保ちます。低温スラッジでオイルの通路を閉鎖することもありません。

エレファント
モーターオイル
日産純正

FIG. 249 NISSAN MOTOR CO., LTD.

REAR SUSPENSION MOUNTING

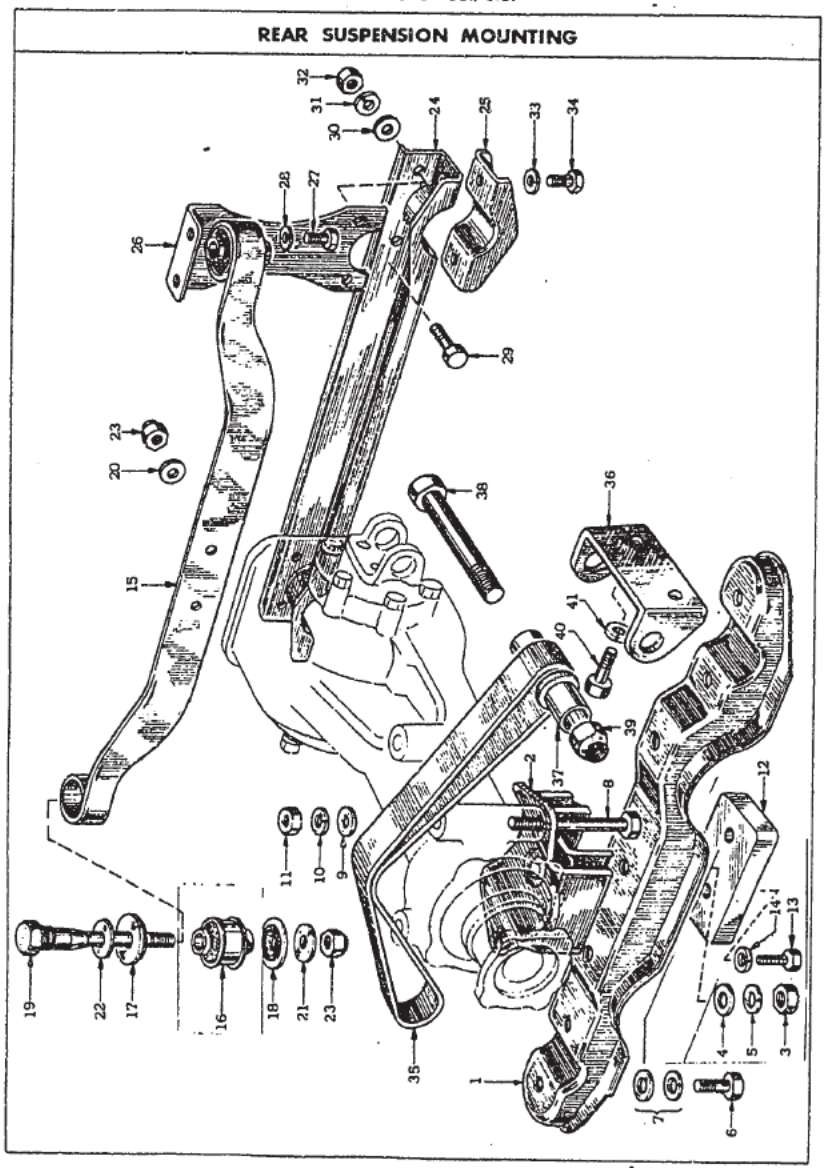

KEY No.	PART NO	PART NAME	QTY	MODELS
		REAR SUSPENSION MOUNTING		
1	55411–E4100....	**MEMBER ASS'Y-differential mounting front**	1	L20,S20
	55411–E8300....	**MEMBER ASS'Y-differential mounting front (from C/# S30-007501, PS30-000501)**	1	ALL
	55411–N3001....	***MEMBER ASS'Y-differential mounting front (from '73 model)**	1	ALL
2	55415–E4101....	INSULATOR ASS'Y-mounting front	1	L20,S20
	55415–E4102....	INSULATOR ASS'Y-mounting front (from C/# S30-00547, PS30-00044)	1	L20,S20
	55415–E8300....	INSULATOR ASS'Y-mounting front (from C/# S30-007501, PS30-000501)	1	ALL
	55415–E8301....	INSULATOR ASS'Y-mounting front (from '72-9)	1	ALL
3	08911–14010....	NUT	1	L20,S20
	08911–24010....	NUT	1	ALL
4	08915–54010....	WASHER-plain	1	ALL
5	08915–14010....	WASHER-lock	1	ALL
6	08124–02510....	BOLT	4	L20,S20
7	08915–24010....	WASHER-lock	4	L20,S20
(6)	08124–03010....	BOLT (from C/# S30-007501, PS30-000501)	4	ALL
(7)	08915–24010....	WASHER-lock (from C/# S30-007501, PS30-000501)	4	ALL
	08915–44010....	WASHER-lock (from C/# S30-007501, PS30-000501)	4	ALL
8	55479–21000....	BOLT	2	ALL
9	08915–54210....	WASHER-plain	2	ALL

1974, 3

FIG. 249 NISSAN MOTOR CO. LTD.

KEY No	PART NO	PART NAME	QTY	MODELS
10	08915-24210....	WASHER-lock	2	ALL
11	08911-24210....	NUT	2	ALL
12	55418-N3000....	*PLATE-dump differential mounting	1	ALL
13	08120-82510....	BOLT-dump differential mounting	2	ALL
14	08915-23810....	WASHER-lock differential mounting	2	ALL
15	55450-E4100....	**MEMBER COMP.-differential mounting rear**	1	ZS,ZL
	55450-E4101....	**MEMBER COMP.-differential mounting rear (from C/# S30-00976)**	1	ZS,ZL,ZA 注1×
	55450-E4102....	**MEMBER COMP.-differential mounting rear**	1	ZS,ZL,ZA
	※印は製作。※印のオーダがある場合は、'72年モデルに仕立てること。			
	◎ 55450-E8300 ×1 55474-E4102 ×2 セット 55474-E8300 ×2 セット			
(15)	※ 55450-E4200....	**MEMBER COMP.-differential mounting rear** (up to '72)	1	PZ,PZR
	※ 55450-E4201....	**MEMBER COMP.-differential mounting rear** (up to '72)	1	PZ,PZR
	◎ 55450-E8300....	**MEMBER COMP.-differential mounting rear ('72) (from C/#S30-007501, PS30-000501)**	1	ALL
16	※ 55476-E4100....	INSULATOR-differential mounting	2	L20, S20
	※ 55476-E4101....	INSULATOR-differential mounting	1	L20, S20
	※ 55476-E4102....	INSULATOR-differential mounting	2	ALL
17	55474-21000....	STOPPER-differential mounting, upper	2	L20, S20
18	55475-21000....	STOPPER-differential mounting, lower	2	L20, S20
	55474-E4102....	STOPPER-differential mounting (from '71 model)	4	ALL

注1. 当該部品は55474-E4102とセットで使用可能であり、単品での互換性は有りません。

KEY No	PART NO	PART NAME	QTY	MODELS
(17)	55474-E4102....	STOPPER-differential mounting, upper (from '72 model)	2	M-all
(18)	55475-E4102....	STOPPER-differential mounting, lower (from '72 model)	2	M-all マニアル
(17)	55474-E8300....	STOPPER-differential mounting, upper (from '72 model)	2	A-all オート
(18)	55475-E8300....	STOPPER-differential mounting, lower (from '72 model)	2	A-all
19	55523-21001....	BOLT-rear suspension mounting rear	2	ALL
	55523-E8300....	BOLT-rear suspension mounting rear	2	ALL
20	08915-54210....	WASHER-plain	2	ALL
21	54474-E4100....	*WASHER-plain	2	ALL
22	08915-44810....	WASHER-plain	2	ALL
23	08912-84210....	NUT	4	ALL
24	55460-E4100....	MEMBER ASS'Y-transverse link	1	L20,S20
	55460-E8300....	MEMBER ASS'Y-transverse link (from C/# S30-007501, PS30-000501)	1	ALL
25	55462-E4100....	BRACKET-transverse link mounting	2	ALL
26	55465-E4100....	BRACE-transverse link mounting	2	ALL
27	08124-02010....	BOLT	4	ALL
28	08915-24010....	WASHER-lock	4	ALL
29	08124-02010....	BOLT	4	ALL
30	08915-54010....	WASHER-plain	4	ALL
31	08915-24010....	WASHER-lock	4	ALL

1974. 3

FIG. 249 NISSAN MOTOR CO. LTD.

KEY No.	PART NO.	PART NAME	QTY	MODELS
32	08911-24010....	NUT	4	ALL
33	08915-24010....	WASHER-lock	4	ALL
34	08124-02010....	BOLT	4	ALL
35	55425-E4100....	BELT-differential torque arrester	1	ALL
36	55421-E4100....	BRACKET-torque arrester	2	L20,S20 ┐ × ┘
	55421-E8300 ...	BRACKET-torque arrester (from C/# S30-007501, PS30-000501)	2	ALL
37	55422-E4100....	PIPE-torque arrester	2	L20,S20 ┐ × ┘
	55422-E8300....	PIPE-torque arrester (from C/# S30-007501, PS30-000501)	2	ALL
38	08114-67510....	BOLT	2	L20,S20 ┐ × ┘
	08124-60310....	BOLT (from C/# S30-007501, PS30-000501)	2	ALL
39	08912-74610....	NUT-self lock	2	ALL
40	08124-02010....	BOLT	4	ALL
41	08915-14010....	WASHER-lock	4	ALL

NOTE

●エレファント　スーパーデラックス

ドロドロした低温スラッジがオイルの通路をふさぐ心配がないので信号待ちの多い市街地を走る場合でも快調です。

エレファント
モーターオイル
日産純正

1974, 3